ANEXA 1

SN5408, SN54LS08, SN54S08
SN7408, SN74LS08, SN74S08
QUADRUPLE 2-INPUT POSITIVE-AND GATES

SDLS033 – DECEMBER 1983 – REVISED MARCH 1988

- **Package Options Include Plastic ''Small Outline'' Packages, Ceramic Chip Carriers and Flat Packages, and Plastic and Ceramic DIPs**
- **Dependable Texas Instruments Quality and Reliability**

description

These devices contain four independent 2-input AND gates.

The SN5408, SN54LS08, and SN54S08 are characterized for operation over the full military temperature range of −55°C to 125°C. The SN7408, SN74LS08 and SN74S08 are characterized for operation from 0° to 70°C.

FUNCTION TABLE (each gate)

INPUTS		OUTPUT
A	B	Y
H	H	H
L	X	L
X	L	L

logic symbol†

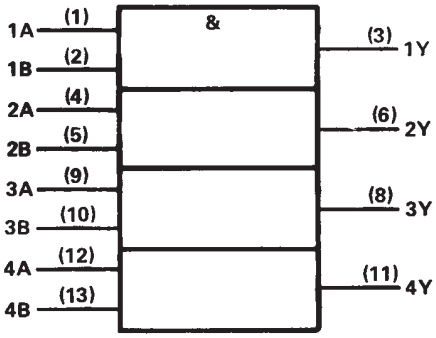

† This symbol is in accordance with ANSI/IEEE Std 91-1984 and IEC Publication 617-12.
Pin numbers shown are for D, J, N, and W packages.

SN5408, SN54LS08, SN54S08 . . . J OR W PACKAGE
SN7408 . . . J OR N PACKAGE
SN74LS08, SN74S08 . . . D, J OR N PACKAGE
(TOP VIEW)

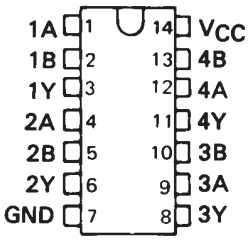

SN54LS08, SN54S08 . . . FK PACKAGE
(TOP VIEW)

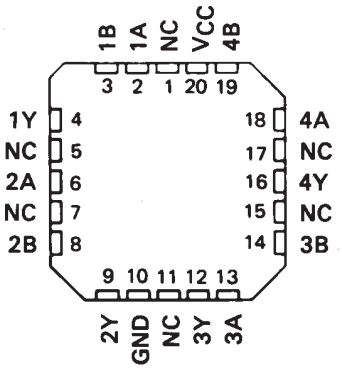

NC—No internal connection

logic diagram (positive logic)

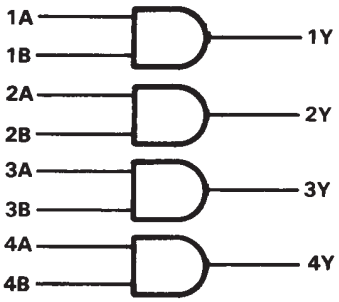

$Y = A \cdot B$ or $Y = \overline{\overline{A} + \overline{B}}$

PRODUCTION DATA information is current as of publication date. Products conform to specifications per the terms of Texas Instruments standard warranty. Production processing does not necessarily include testing of all parameters.

Copyright © 1988, Texas Instruments Incorporated

ANEXA 2

SN5442A, SN54LS42, SN7442A, SN74LS42
4-LINE BCD TO 10-LINE DECIMAL DECODERS

SDLS109 – MARCH 1974 – REVISED MARCH 1988

- **All Outputs Are High for Invalid Input Conditions**
- **Also for Application as**
  4-Line-to-16-Line Decoders
  3-Line-to-8-Line Decoders
- **Diode-Clamped Inputs**

TYPES	TYPICAL POWER DISSIPATION	TYPICAL PROPAGATION DELAYS
'42A	140 mW	17 ns
'LS42	35 mW	17 ns

SN5442A, SN54LS42 . . . J OR W PACKAGE
SN7442A . . . N PACKAGE
SN74LS42 . . . D OR N PACKAGE
(TOP VIEW)

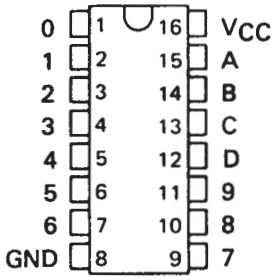

SN54LS42 . . . FK PACKAGE
(TOP VIEW)

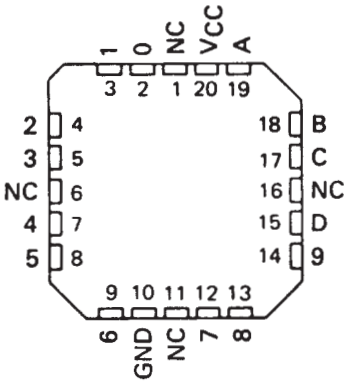

NC - No internal connection

description

These monolithic BCD-to-decimal decoders consist of eight inverters and ten four-input NAND gates. The inverters are connected in pairs to make BCD input data available for decoding by the NAND gates. Full decoding of valid input logic ensures that all outputs remain off for all invalid input conditions.

The '42A and 'LS42 feature inputs and outputs that are compatible for use with most TTL and other saturated low-level logic circuits. DC noise margins are typically one volt.

The SN5442A and SN54LS42 are characterized for operation over the full military temperature range of −55°C to 125°C. The SN7442A and SN74LS42 are characterized for operation from 0°C to 70°C.

PRODUCTION DATA information is current as of publication date. Products conform to specifications per the terms of Texas Instruments standard warranty. Production processing does not necessarily include testing of all parameters.

Copyright © 1988, Texas Instruments Incorporated

logic symbol†

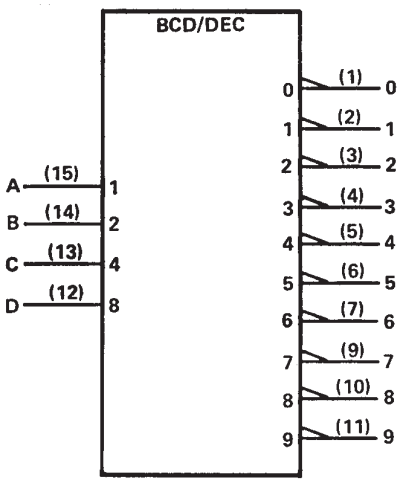

† This symbol is in accordance with ANSI/IEEE Std 91-1984 and IEC Publication 617-12.

logic diagram (positive logic)

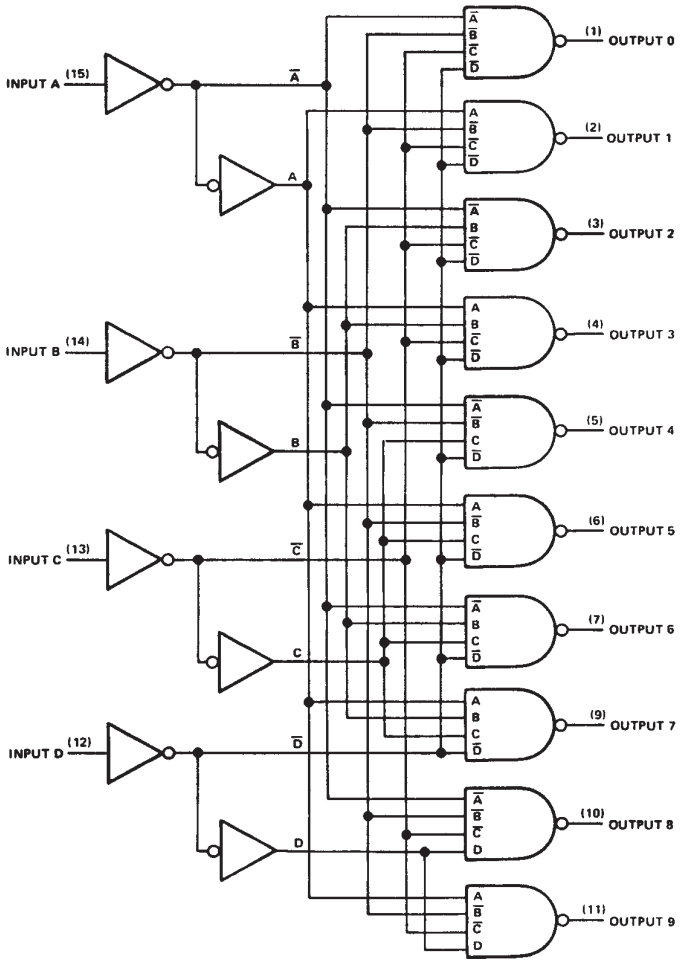

Pin numbers shown are for D, J, N, and W packages.

ANEXA 3

SN5446A, ’47A, ’48, SN54LS47, ’LS48, ’LS49
SN7446A, ’47A, ’48, SN74LS47, ’LS48, ’LS49
BCD-TO-SEVEN-SEGMENT DECODERS/DRIVERS

SDLS111 – MARCH 1974 – REVISED MARCH 1988

’46A, ’47A, ’LS47 feature

- **Open-Collector Outputs Drive Indicators Directly**
- **Lamp-Test Provision**
- **Leading/Trailing Zero Suppression**

’48, ’LS48 feature

- **Internal Pull-Ups Eliminate Need for External Resistors**
- **Lamp-Test Provision**
- **Leading/Trailing Zero Suppression**

’LS49 feature

- **Open-Collector Outputs**
- **Blanking Input**

SN5446A, SN5447A, SN54LS47, SN5448, SN54LS48 . . . J PACKAGE
SN7446A, SN7447A, SN7448 . . . N PACKAGE
SN74LS47, SN74LS48 . . . D OR N PACKAGE
(TOP VIEW)

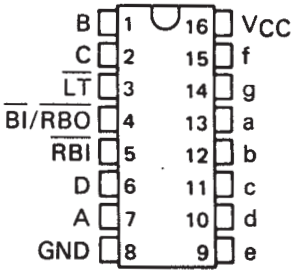

SN54LS47, SN54LS48 . . . FK PACKAGE
(TOP VIEW)

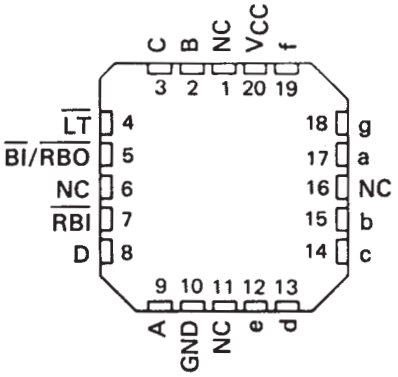

SN54LS49 . . . J OR W PACKAGE
SN74LS49 . . . D OR N PACKAGE
(TOP VIEW)

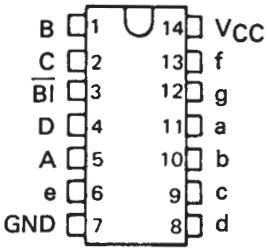

SN54LS49 . . . FK PACKAGE
(TOP VIEW)

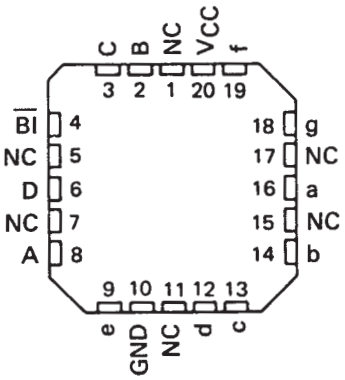

NC — No internal connection

PRODUCTION DATA information is current as of publication date. Products conform to specifications per the terms of Texas Instruments standard warranty. Production processing does not necessarily include testing of all parameters.

Copyright © 1988, Texas Instruments Incorporated

TEXAS INSTRUMENTS
POST OFFICE BOX 655303 • DALLAS, TEXAS 75265

- **All Circuit Types Feature Lamp Intensity Modulation Capability**

TYPE	DRIVER OUTPUTS				TYPICAL POWER DISSIPATION	PACKAGES
	ACTIVE LEVEL	OUTPUT CONFIGURATION	SINK CURRENT	MAX VOLTAGE		
SN5446A	low	open-collector	40 mA	30 V	320 mW	J, W
SN5447A	low	open-collector	40 mA	15 V	320 mW	J, W
SN5448	high	2-kΩ pull-up	6.4 mA	5.5 V	265 mW	J,W
SN54LS47	low	open-collector	12 mA	15 V	35 mW	J, W
SN54LS48	high	2-kΩ pull-up	2 mA	5.5 V	125 mW	J, W
SN54LS49	high	open-collector	4 mA	5.5 V	40 mW	J, W
SN7446A	low	open-collector	40 mA	30 V	320 mW	J, N
SN7447A	low	open-collector	40 mA	15 V	320 mW	J, N
SN7448	high	2-kΩ pull-up	6.4 mA	5.5 V	265 mW	J, N
SN74LS47	low	open-collector	24 mA	15 V	35 mW	J, N
SN74LS48	high	2-kΩ pull-up	6 mA	5.5 V	125 mW	J, N
SN74LS49	high	open-collector	8 mA	5.5 V	40 mW	J, N

logic symbols†

'46A, '47A, 'LS47

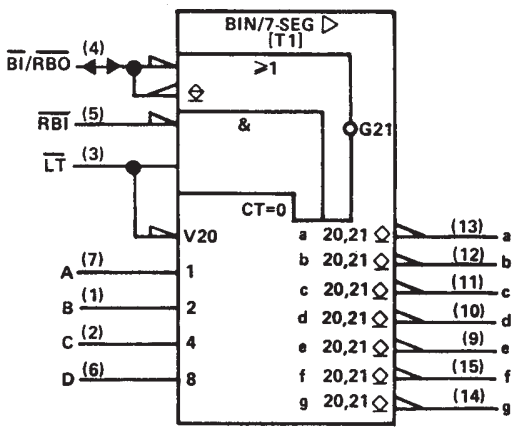

'48, 'LS48

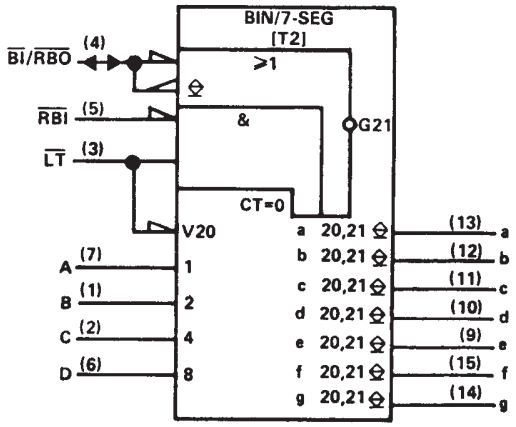

'LS49

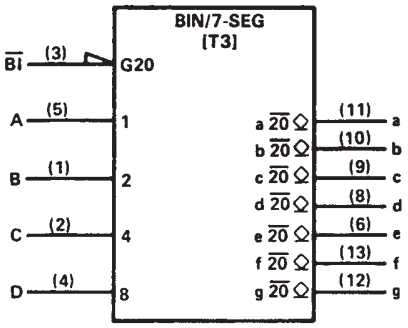

†These symbols are in accordance with ANSI/IEEE Std 91-1984 and IEC Publication 617-12.
Pin numbers shown are for D, J, N, and W packages.

description

The '46A, '47A, and 'LS47 feature active-low outputs designed for driving common-anode LEDs or incandescent indicators directly. The '48, 'LS48, and 'LS49 feature active-high outputs for driving lamp buffers or common-cathode LEDs. All of the circuits except 'LS49 have full ripple-blanking input/output controls and a lamp test input. The 'LS49 circuit incorporates a direct blanking input. Segment identification and resultant displays are shown below. Display patterns for BCD input counts above 9 are unique symbols to authenticate input conditions.

The '46A, '47A, '48, 'LS47, and 'LS48 circuits incorporate automatic leading and/or trailing-edge zero-blanking control ($\overline{RBI}$ and $\overline{RBO}$). Lamp test ($\overline{LT}$) of these types may be performed at any time when the $\overline{BI}/\overline{RBO}$ node is at a high level. All types (including the '49 and 'LS49) contain an overriding blanking input ($\overline{BI}$), which can be used to control the lamp intensity by pulsing or to inhibit the outputs. Inputs and outputs are entirely compatible for use with TTL logic outputs.

The SN54246/SN74246 and '247 and the SN54LS247/SN74LS247 and 'LS248 compose the 6 and the 9 with tails and were designed to offer the designer a choice between two indicator fonts.

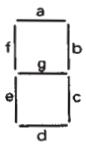

SEGMENT IDENTIFICATION

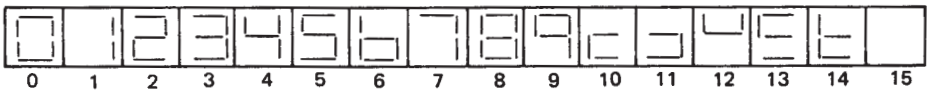

NUMERICAL DESIGNATIONS AND RESULTANT DISPLAYS

'46A, '47A, 'LS47 FUNCTION TABLE (T1)

DECIMAL OR FUNCTION	INPUTS						$\overline{BI}/\overline{RBO}$†	OUTPUTS							NOTE
	$\overline{LT}$	$\overline{RBI}$	D	C	B	A		a	b	c	d	e	f	g	
0	H	H	L	L	L	L	H	ON	ON	ON	ON	ON	ON	OFF	1
1	H	X	L	L	L	H	H	OFF	ON	ON	OFF	OFF	OFF	OFF	
2	H	X	L	L	H	L	H	ON	ON	OFF	ON	ON	OFF	ON	
3	H	X	L	L	H	H	H	ON	ON	ON	ON	OFF	OFF	ON	
4	H	X	L	H	L	L	H	OFF	ON	ON	OFF	OFF	ON	ON	
5	H	X	L	H	L	H	H	ON	OFF	ON	ON	OFF	ON	ON	
6	H	X	L	H	H	L	H	OFF	OFF	ON	ON	ON	ON	ON	
7	H	X	L	H	H	H	H	ON	ON	ON	OFF	OFF	OFF	OFF	
8	H	X	H	L	L	L	H	ON	ON	ON	ON	ON	ON	ON	
9	H	X	H	L	L	H	H	ON	ON	ON	OFF	OFF	ON	ON	
10	H	X	H	L	H	L	H	OFF	OFF	OFF	ON	ON	OFF	ON	
11	H	X	H	L	H	H	H	OFF	OFF	ON	ON	OFF	OFF	ON	
12	H	X	H	H	L	L	H	OFF	ON	OFF	OFF	OFF	ON	ON	
13	H	X	H	H	L	H	H	ON	OFF	OFF	ON	OFF	ON	ON	
14	H	X	H	H	H	L	H	OFF	OFF	OFF	ON	ON	ON	ON	
15	H	X	H	H	H	H	H	OFF	OFF	OFF	OFF	OFF	OFF	OFF	
$\overline{BI}$	X	X	X	X	X	X	L	OFF	OFF	OFF	OFF	OFF	OFF	OFF	2
$\overline{RBI}$	H	L	L	L	L	L	L	OFF	OFF	OFF	OFF	OFF	OFF	OFF	3
$\overline{LT}$	L	X	X	X	X	X	H	ON	ON	ON	ON	ON	ON	ON	4

H = high level, L = low level, X = irrelevant

NOTES:
1. The blanking input ($\overline{BI}$) must be open or held at a high logic level when output functions 0 through 15 are desired. The ripple-blanking input ($\overline{RBI}$) must be open or high if blanking of a decimal zero is not desired.
2. When a low logic level is applied directly to the blanking input ($\overline{BI}$), all segment outputs are off regardless of the level of any other input.
3. When ripple-blanking input ($\overline{RBI}$) and inputs A, B, C, and D are at a low level with the lamp test input high, all segment outputs go off and the ripple-blanking output ($\overline{RBO}$) goes to a low level (response condition).
4. When the blanking input/ripple blanking output ($\overline{BI}/\overline{RBO}$) is open or held high and a low is applied to the lamp-test input, all segment outputs are on.

† $\overline{BI}/\overline{RBO}$ is wire AND logic serving as blanking input ($\overline{BI}$) and/or ripple-blanking output ($\overline{RBO}$).

'48, 'LS48
FUNCTION TABLE (T2)

DECIMAL OR FUNCTION	INPUTS						$\overline{BI}/\overline{RBO}$†	OUTPUTS							NOTE
	$\overline{LT}$	$\overline{RBI}$	D	C	B	A		a	b	c	d	e	f	g	
0	H	H	L	L	L	L	H	H	H	H	H	H	H	L	1
1	H	X	L	L	L	H	H	L	H	H	L	L	L	L	
2	H	X	L	L	H	L	H	H	H	L	H	H	L	H	
3	H	X	L	L	H	H	H	H	H	H	H	L	L	H	
4	H	X	L	H	L	L	H	L	H	H	L	L	H	H	
5	H	X	L	H	L	H	H	H	L	H	H	L	H	H	
6	H	X	L	H	H	L	H	L	L	H	H	H	H	H	
7	H	X	L	H	H	H	H	H	H	H	L	L	L	L	
8	H	X	H	L	L	L	H	H	H	H	H	H	H	H	
9	H	X	H	L	L	H	H	H	H	H	L	L	H	H	
10	H	X	H	L	H	L	H	L	L	L	H	H	L	H	
11	H	X	H	L	H	H	H	L	L	H	H	L	L	H	
12	H	X	H	H	L	L	H	L	H	L	L	L	H	H	
13	H	X	H	H	L	H	H	H	L	L	H	L	H	H	
14	H	X	H	H	H	L	H	L	L	L	H	H	H	H	
15	H	X	H	H	H	H	H	L	L	L	L	L	L	L	
BI	X	X	X	X	X	X	L	L	L	L	L	L	L	L	2
RBI	H	L	L	L	L	L	L	L	L	L	L	L	L	L	3
LT	L	X	X	X	X	X	H	H	H	H	H	H	H	H	4

H = high level, L = low level, X = irrelevant

NOTES: 1. The blanking input ($\overline{BI}$) must be open or held at a high logic level when output functions 0 through 15 are desired. The ripple-blanking input ($\overline{RBI}$) must be open or high, if blanking of a decimal zero is not desired.
2. When a low logic level is applied directly to the blanking input ($\overline{BI}$), all segment outputs are low regardless of the level of any other input.
3. When ripple-blanking input ($\overline{RBI}$) and inputs A, B, C, and D are at a low level with the lamp-test input high, all segment outputs go low and the ripple-blanking output ($\overline{RBO}$) goes to a low level (response condition).
4. When the blanking input/ripple-blanking output ($\overline{BI}/\overline{RBO}$) is open or held high and a low is applied to the lamp-test input, all segment outputs are high.

†$\overline{BI}/\overline{RBO}$ is wire-AND logic serving as blanking input ($\overline{BI}$) and/or ripple-blanking output ($\overline{RBO}$).

'LS49
FUNCTION TABLE (T3)

DECIMAL OR FUNCTION	INPUTS					OUTPUTS							NOTE
	D	C	B	A	$\overline{BI}$	a	b	c	d	e	f	g	
0	L	L	L	L	H	H	H	H	H	H	H	L	1
1	L	L	L	H	H	L	H	H	L	L	L	L	
2	L	L	H	L	H	H	H	L	H	H	L	H	
3	L	L	H	H	H	H	H	H	H	L	L	H	
4	L	H	L	L	H	L	H	H	L	L	H	H	
5	L	H	L	H	H	H	L	H	H	L	H	H	
6	L	H	H	L	H	L	L	H	H	H	H	H	
7	L	H	H	H	H	H	H	H	L	L	L	L	
8	H	L	L	L	H	H	H	H	H	H	H	H	
9	H	L	L	H	H	H	H	H	L	L	H	H	
10	H	L	H	L	H	L	L	L	H	H	L	H	
11	H	L	H	H	H	L	L	H	H	L	L	H	
12	H	H	L	L	H	L	H	L	L	L	H	H	
13	H	H	L	H	H	H	L	L	H	L	H	H	
14	H	H	H	L	H	L	L	L	H	H	H	H	
15	H	H	H	H	H	L	L	L	L	L	L	L	
BI	X	X	X	X	L	L	L	L	L	L	L	L	2

H = high level, L = low level, X = irrelevant

NOTES: 1. The blanking input ($\overline{BI}$) must be open or held at a high logic level when output functions 0 through 15 are desired.
2. When a low logic level is applied directly to the blanking input ($\overline{BI}$), all segment outputs are low regardless of the level of any other input.

logic diagrams (positive logic)

’46A, ’47A, ’LS47

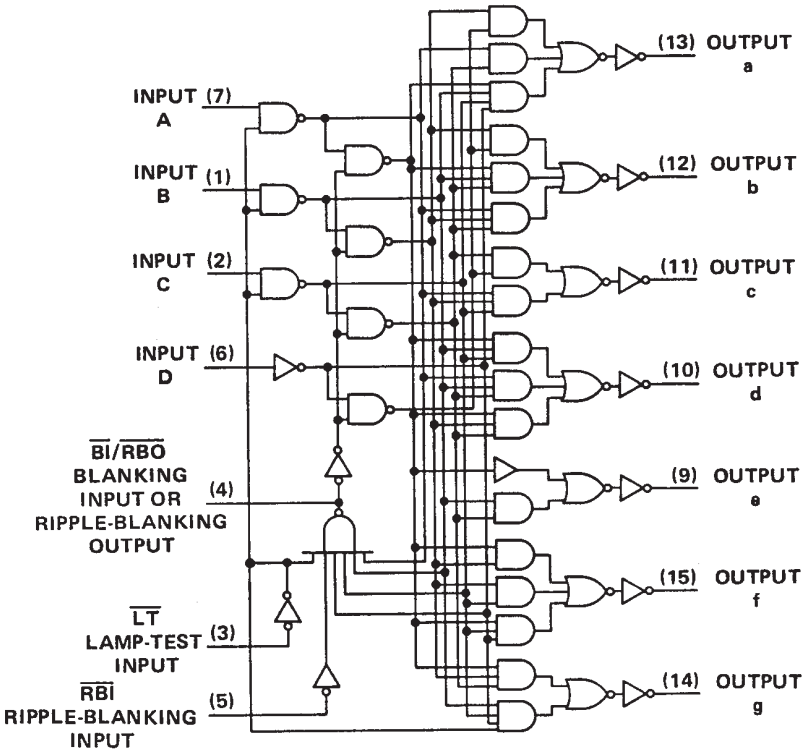

’48, ’LS48

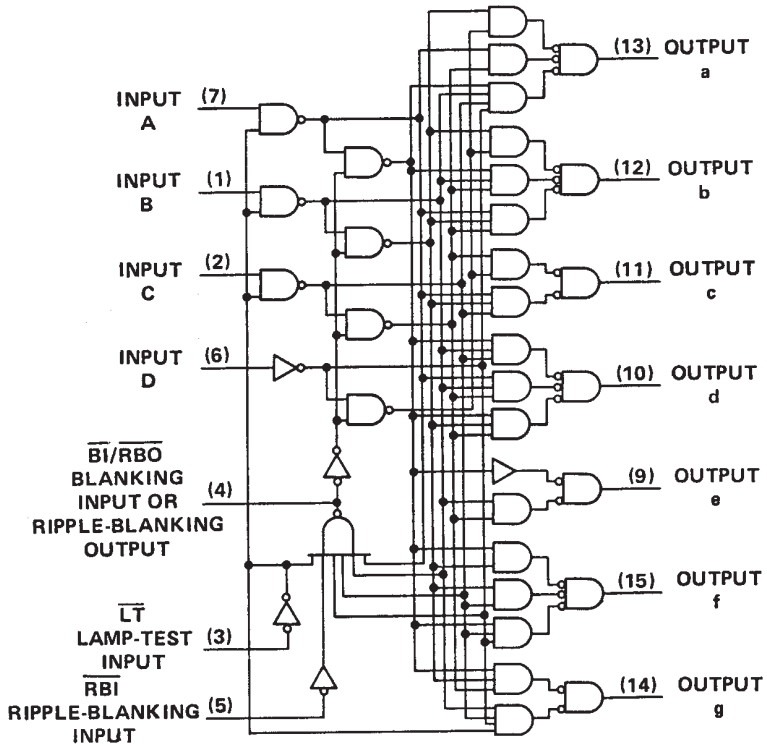

Pin numbers shown are for D, J, N, and W packages.

logic diagrams (continued)

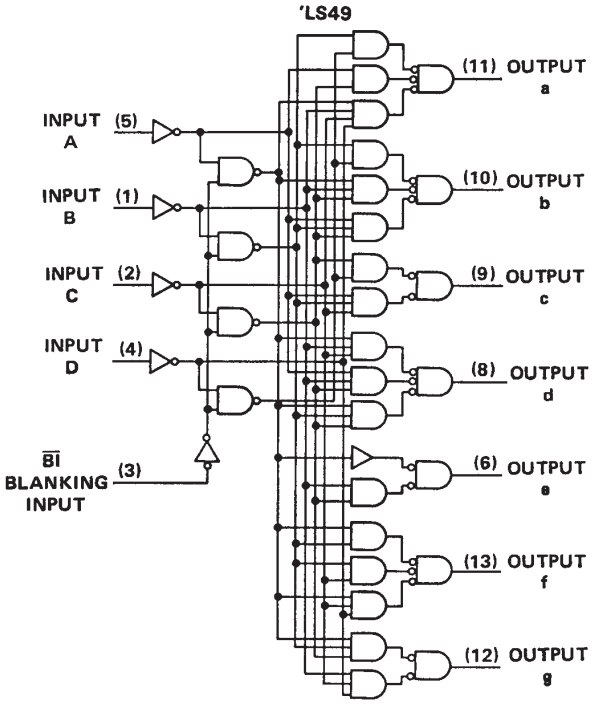

Pin numbers shown are for D, J, N, and W packages.

MOTOROLA

ANEXA 4

MC54/74F151

8-INPUT MULTIPLEXER

The MC54/74F151 is a high-speed 8-input digital multiplexer. It provides in one package, the ability to select one line of data from up to eight sources. The F151 can be used as a universal function generator to generate any logic function of four variables. Both asserted and negated outputs are provided.

The F151 is a logic implementation of a single pole, 8-position switch with the switch position controlled by the state of three Select inputs, S_0, S_1, S_2. The Enable input ($\overline{E}$) is active LOW. The logic function provided at the output is:

$$Z = \overline{E} \bullet (I_0 \bullet \overline{S}_0 \bullet \overline{S}_1 \bullet \overline{S}_2 + I_1 \bullet S_0 \bullet \overline{S}_1 \bullet \overline{S}_2 + I_2 \bullet \overline{S}_0 \bullet S_1 \bullet \overline{S}_2 + I_3 \bullet S_0 \bullet S_1 \bullet \overline{S}_2 + I_4 \bullet \overline{S}_0 \bullet \overline{S}_1 \bullet S_2 + I_5 \bullet S_0 \bullet \overline{S}_1 \bullet S_2 + I_6 \bullet \overline{S}_0 \bullet S_1 \bullet S_2 + I_7 \bullet S_0 \bullet S_1 \bullet S_2)$$

CONNECTION DIAGRAM DIP (TOP VIEW)

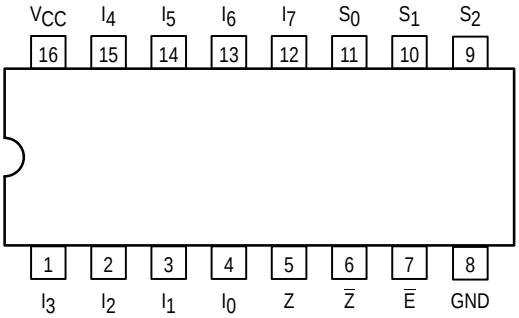

LOGIC DIAGRAM

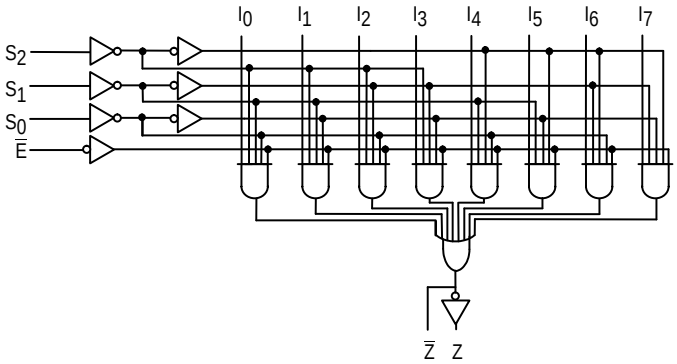

FUNCTION TABLE

Inputs				Outputs	
$\overline{E}$	S_2	S_1	S_0	$\overline{Z}$	Z
H	X	X	X	H	L
L	L	L	L	$\overline{I}_0$	I_0
L	L	L	H	$\overline{I}_1$	I_1
L	L	H	L	$\overline{I}_2$	I_2
L	L	H	H	$\overline{I}_3$	I_3
L	H	L	L	$\overline{I}_4$	I_4
L	H	L	H	$\overline{I}_5$	I_5
L	H	H	L	$\overline{I}_6$	I_6
L	H	H	H	$\overline{I}_7$	I_7

H = HIGH Voltage Level; L = LOW Voltage Level; X = Don't Care

8-INPUT MULTIPLEXER

FAST™ SHOTTKY TTL

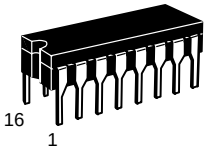

J SUFFIX
CERAMIC
CASE 620-09

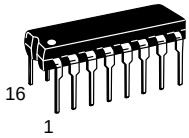

N SUFFIX
PLASTIC
CASE 648-08

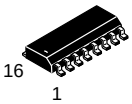

D SUFFIX
SOIC
CASE 751B-03

ORDERING INFORMATION

MC54FXXXJ	Ceramic
MC74FXXXN	Plastic
MC74FXXXD	SOIC

LOGIC SYMBOL

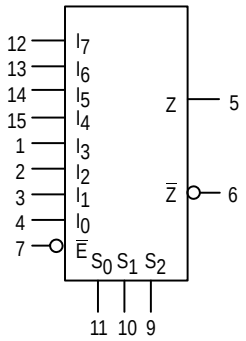

V_{CC} = PIN 16
GND = PIN 8

National Semiconductor

ANEXA 5

May 1989

DM54LS154/DM74LS154 4-Line to 16-Line Decoders/Demultiplexers

General Description

Each of these 4-line-to-16-line decoders utilizes TTL circuitry to decode four binary-coded inputs into one of sixteen mutually exclusive outputs when both the strobe inputs, G1 and G2, are low. The demultiplexing function is performed by using the 4 input lines to address the output line, passing data from one of the strobe inputs with the other strobe input low. When either strobe input is high, all outputs are high. These demultiplexers are ideally suited for implementing high-performance memory decoders. All inputs are buffered and input clamping diodes are provided to minimize transmission-line effects and thereby simplify system design.

Features

- Decodes 4 binary-coded inputs into one of 16 mutually exclusive outputs
- Performs the demultiplexing function by distributing data from one input line to any one of 16 outputs
- Input clamping diodes simplify system design
- High fan-out, low-impedance, totem-pole outputs
- Typical propagation delay
  3 levels of logic 23 ns
  Strobe 19 ns
- Typical power dissipation 45 mW

Connection and Logic Diagrams

Dual-In-Line Package

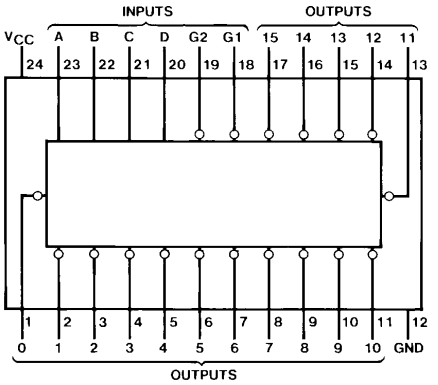

TL/F/6394–1

Order Number DM54LS154J, DM74LS154WM or DM74LS154N
See NS Package Number J24A, M24B or N24A

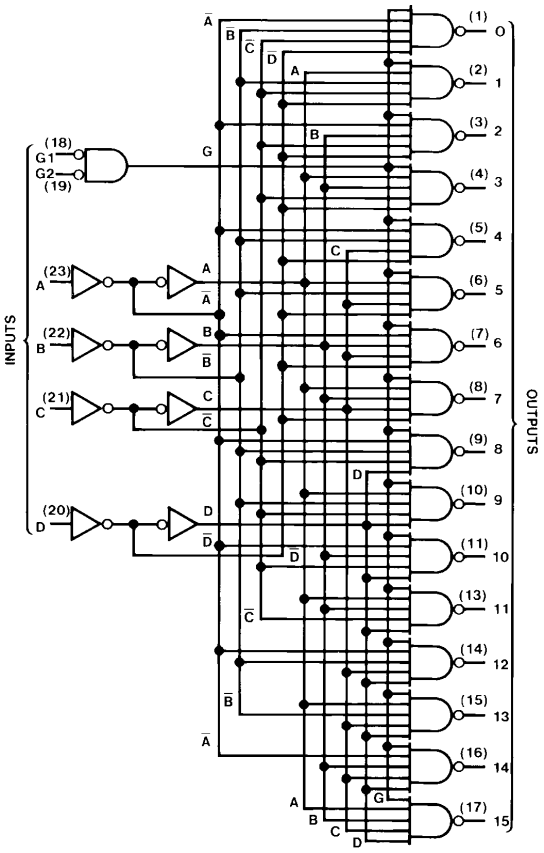

TL/F/6394–2

©1995 National Semiconductor Corporation RRD-B30M105/Printed in U. S. A.

SN54147, SN54148, SN54LS147, SN54LS148
SN74147, SN74148 (TIM9907), SN74LS147, SN74LS148
10-LINE TO 4-LINE AND 8-LINE TO 3-LINE PRIORITY ENCODERS

SDLS053A – OCTOBER 1976 – REVISED FEBRUARY 2001

'147, 'LS147

- **Encodes 10-Line Decimal to 4-Line BCD**
- **Applications Include:**
  - **Keyboard Encoding**
  - **Range Selection**

'148, 'LS148

- **Encodes 8 Data Lines to 3-Line Binary (Octal)**
- **Applications Include:**
  - **N-Bit Encoding**
  - **Code Converters and Generators**

TYPE	TYPICAL DATA DELAY	TYPICAL POWER DISSIPATION
'147	10 ns	225 mW
'148	10 ns	190 mW
'LS147	15 ns	60 mW
'LS148	15 ns	60 mW

SN54147, SN54LS147, SN54148, SN54LS148 . . . J OR W PACKAGE
SN74147, SN74148 . . . N PACKAGE
SN74LS147, SN74LS148 . . . D OR N PACKAGE
(TOP VIEW)

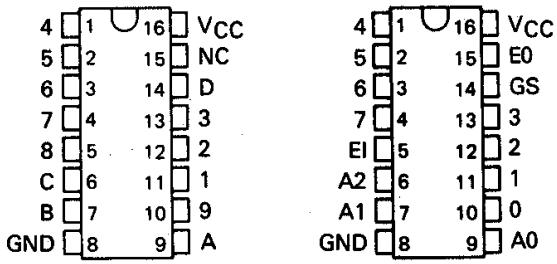

SN54LS147, SN54LS148 . . . FK PACKAGE
(TOP VIEW)

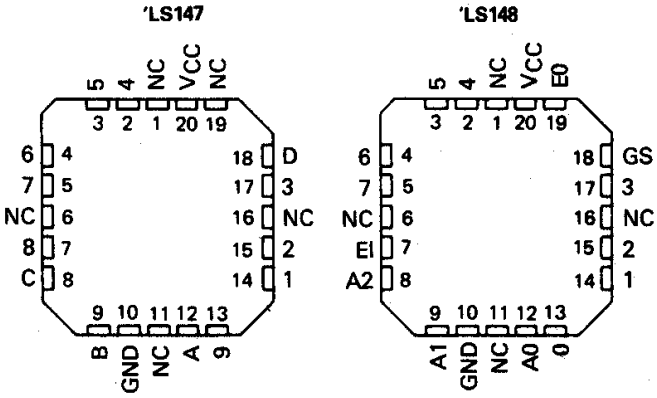

NC - No internal connection

description

These TTL encoders feature priority decoding of the inputs to ensure that only the highest-order data line is encoded. The '147 and 'LS147 encode nine data lines to four-line (8-4-2-1) BCD. The implied decimal zero condition requires no input condition as zero is encoded when all nine data lines are at a high logic level. The '148 and 'LS148 encode eight data lines to three-line (4-2-1) binary (octal). Cascading circuitry (enable input EI and enable output EO) has been provided to allow octal expansion without the need for external circuitry. For all types, data inputs and outputs are active at the low logic level. All inputs are buffered to represent one normalized Series 54/74 or 54LS/74LS load, respectively.

'147, 'LS147
FUNCTION TABLE

INPUTS									OUTPUTS			
1	2	3	4	5	6	7	8	9	D	C	B	A
H	H	H	H	H	H	H	H	H	H	H	H	H
X	X	X	X	X	X	X	X	L	L	H	H	L
X	X	X	X	X	X	X	L	H	L	H	H	H
X	X	X	X	X	X	L	H	H	H	L	L	L
X	X	X	X	X	L	H	H	H	H	L	L	H
X	X	X	X	L	H	H	H	H	H	L	H	L
X	X	X	L	H	H	H	H	H	H	L	H	H
X	X	L	H	H	H	H	H	H	H	H	L	L
X	L	H	H	H	H	H	H	H	H	H	L	H
L	H	H	H	H	H	H	H	H	H	H	H	L

H = high logic level, L = low logic level, X = irrelevant

'148, 'LS148
FUNCTION TABLE

INPUTS									OUTPUTS				
EI	0	1	2	3	4	5	6	7	A2	A1	A0	GS	EO
H	X	X	X	X	X	X	X	X	H	H	H	H	H
L	H	H	H	H	H	H	H	H	H	H	H	H	L
L	X	X	X	X	X	X	X	L	L	L	L	L	H
L	X	X	X	X	X	X	L	H	L	L	H	L	H
L	X	X	X	X	X	L	H	H	L	H	L	L	H
L	X	X	X	X	L	H	H	H	L	H	H	L	H
L	X	X	X	L	H	H	H	H	H	L	L	L	H
L	X	X	L	H	H	H	H	H	H	L	H	L	H
L	X	L	H	H	H	H	H	H	H	H	L	L	H
L	L	H	H	H	H	H	H	H	H	H	H	L	H

PRODUCTION DATA information is current as of publication date. Products conform to specifications per the terms of Texas Instruments standard warranty. Production processing does not necessarily include testing of all parameters.

Copyright © 2001, Texas Instruments Incorporated

logic symbols†

'147, 'LS147

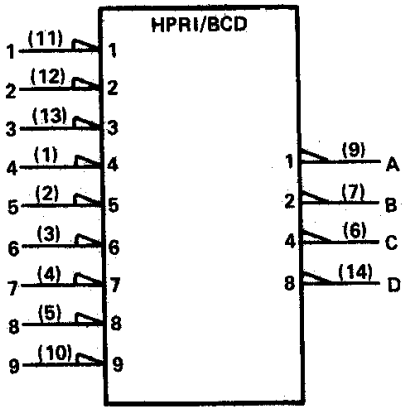

'148, 'LS148

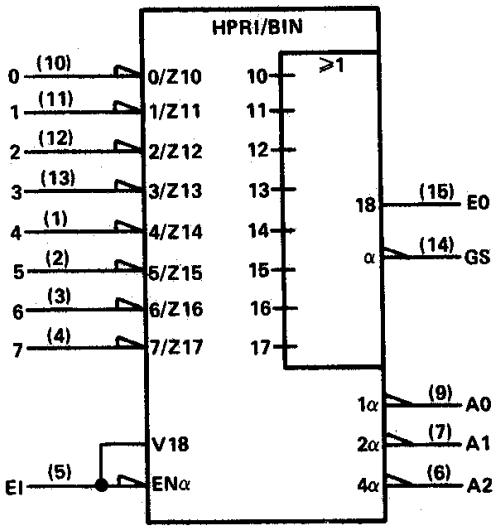

†These symbols are in accordance with ANSI/IEEE Std. 91-1984 and IEC Publication 617-12.
Pin numbers shown are for D, J, N, and W packages.

logic diagrams

'147, 'LS147

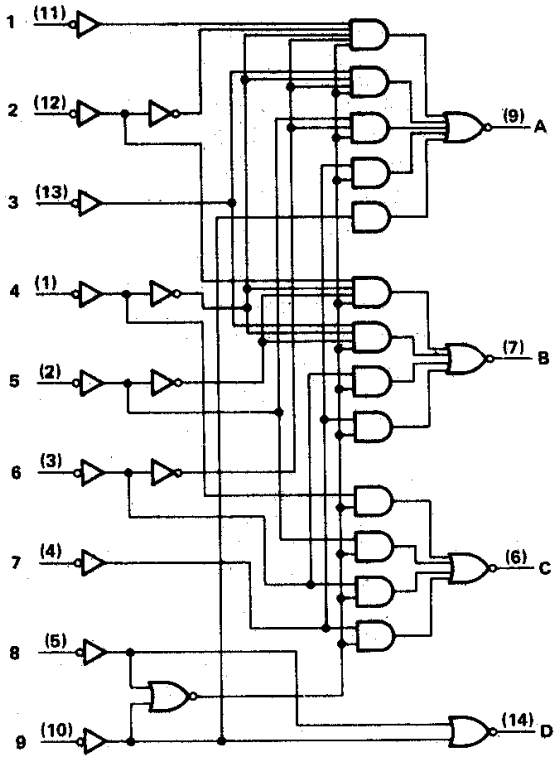

'148, 'LS148

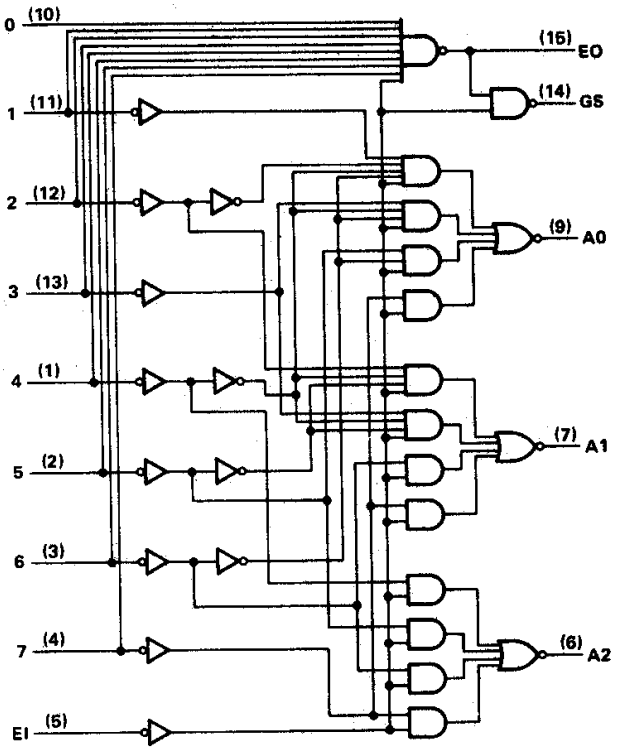

Pin numbers shown are for D, J, N, and W packages.

ANEXA 7

SN5485, SN54LS85, SN54S85
SN7485, SN74LS85, SN74S85
4-BIT MAGNITUDE COMPARATORS

SDLS123 – MARCH 1974 – REVISED MARCH 1988

TYPE	TYPICAL POWER DISSIPATION	TYPICAL DELAY (4-BIT WORDS)
'85	275 mW	23 ns
'LS85	52 mW	24 ns
'S85	365 mW	11 ns

SN5485, SN54LS85, SN54S85 . . . J OR W PACKAGE
SN7485 . . . N PACKAGE
SN74LS85, SN74S85 . . . D OR N PACKAGE
(TOP VIEW)

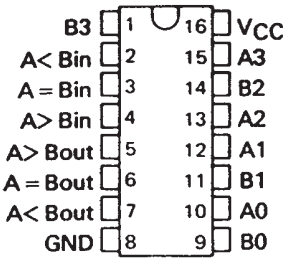

SN54LS85, SN54S85 . . . FK PACKAGE
(TOP VIEW)

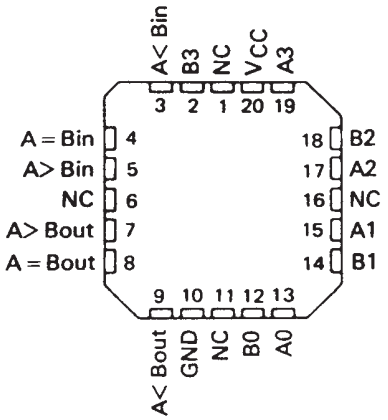

NC - No internal connection

description

These four-bit magnitude comparators perform comparison of straight binary and straight BCD (8-4-2-1) codes. Three fully decoded decisions about two 4-bit words (A, B) are made and are externally available at three outputs. These devices are fully expandable to any number of bits without external gates. Words of greater length may be compared by connecting comparators in cascade. The A > B, A < B, and A = B outputs of a stage handling less-significant bits are connected to the corresponding A > B, A < B, and A = B inputs of the next stage handling more-significant bits. The stage handling the least-significant bits must have a high-level voltage applied to the A = B input. The cascading paths of the '85, 'LS85, and 'S85 are implemented with only a two-gate-level delay to reduce overall comparison times for long words. An alternate method of cascading which further reduces the comparison time is shown in the typical application data.

FUNCTION TABLE

COMPARING INPUTS				CASCADING INPUTS			OUTPUTS		
A3, B3	A2, B2	A1, B1	A0, B0	A > B	A < B	A = B	A > B	A < B	A = B
A3 > B3	X	X	X	X	X	X	H	L	L
A3 < B3	X	X	X	X	X	X	L	H	L
A3 = B3	A2 > B2	X	X	X	X	X	H	L	L
A3 = B3	A2 < B2	X	X	X	X	X	L	H	L
A3 = B2	A2 = B2	A1 > B1	X	X	X	X	H	L	L
A3 = B3	A2 = B2	A1 < B1	X	X	X	X	L	H	L
A2 = B3	A2 = B2	A1 = B1	A0 > B0	X	X	X	H	L	L
A3 = B3	A2 = B2	A1 = B1	A0 < B0	X	X	X	L	H	L
A3 = B3	A2 = B2	A1 = B1	A0 = B0	H	L	L	H	L	L
A3 = B3	A2 = B2	A1 = B1	A0 = B0	L	H	L	L	H	L
A3 = B3	A2 = B2	A1 = B1	A0 = B0	X	X	H	L	L	H
A3 = B3	A2 = B2	A1 = B1	A0 = B0	H	H	L	L	L	L
A3 = B3	A2 = B2	A1 = B1	A0 = B0	L	L	L	H	H	L

PRODUCTION DATA information is current as of publication date. Products conform to specifications per the terms of Texas Instruments standard warranty. Production processing does not necessarily include testing of all parameters.

Copyright © 1988, Texas Instruments Incorporated

logic diagrams (positive logic)

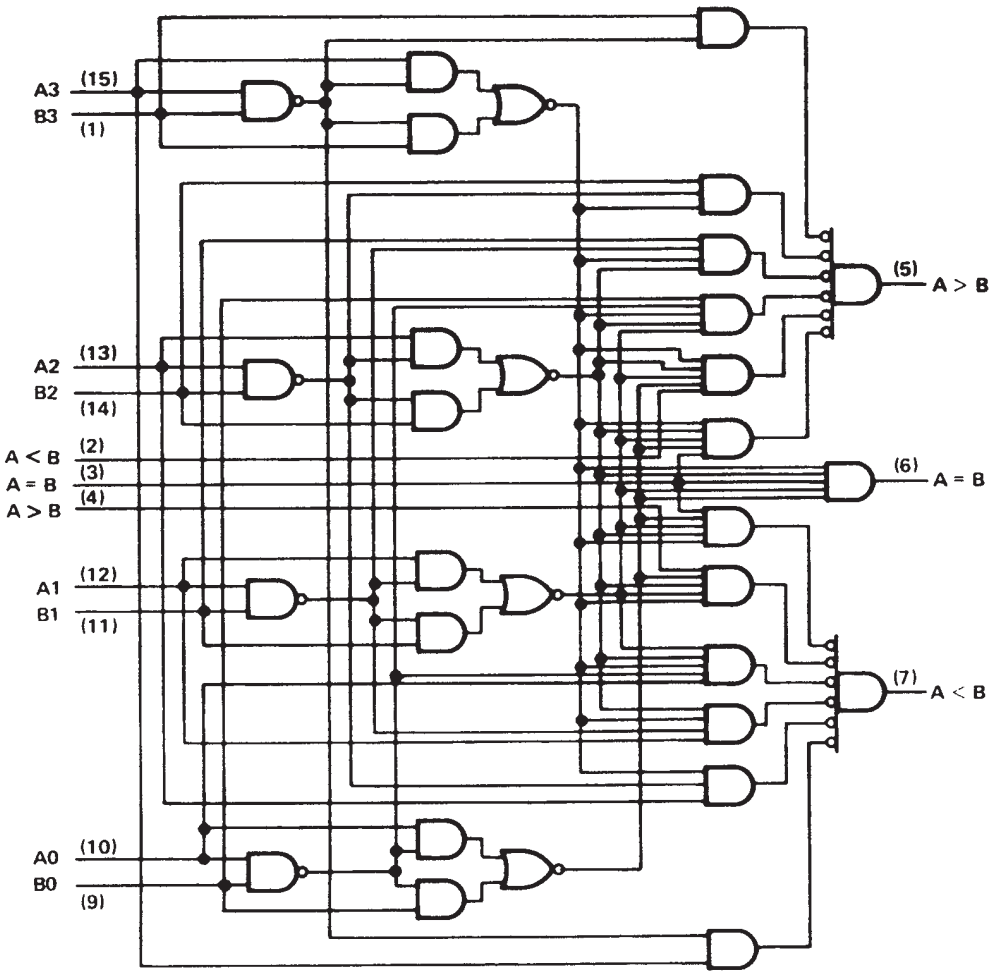

logic symbol†

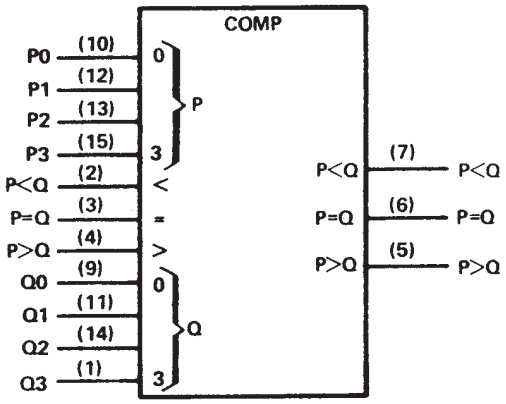

†This symbol is in accordancae with ANSI/IEEE Std 91-1984 and IEC Publication 617-12.
Pin numbers shown are for D, J, N, and W packages.

ANEXA 8

SN54LS280, SN54S280, SN74LS280, SN74S280
9-BIT ODD/EVEN PARITY GENERATORS/CHECKERS

SDLS152 – DECEMBER 1972 – REVISED MARCH 1988

- **Generates Either Odd or Even Parity for Nine Data Lines**
- **Cascadable for n-Bits**
- **Can Be Used to Upgrade Existing Systems using MSI Parity Circuits**
- **Typical Data-to-Output Delay of Only 14 ns for 'S280 and 33 ns for 'LS280**
- **Typical Power Dissipation:**
  'LS280 . . . 80 mW
  'S280 . . . 335 mW

SN54LS280, SN54S280 . . . J OR W PACKAGE
SN74LS280, SN74S280 . . . D OR N PACKAGE
(TOP VIEW)

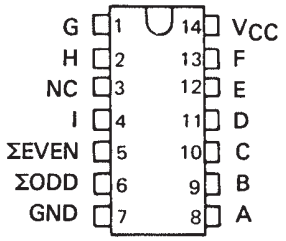

FUNCTION TABLE

NUMBER OF INPUTS A THRU I THAT ARE HIGH	OUTPUTS Σ EVEN	OUTPUTS Σ ODD
0, 2, 4, 6, 8	H	L
1, 3, 5, 7, 9	L	H

H = high level, L = low level

SN54LS280, SN54S280 . . . FK PACKAGE
(TOP VIEW)

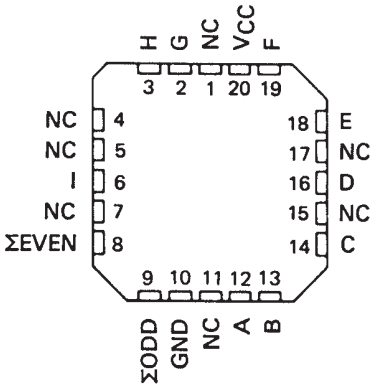

NC – No internal connection

logic symbol†

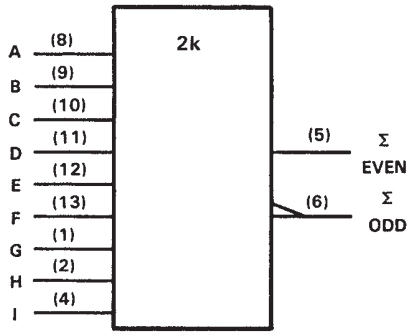

†This symbol is in accordance with ANSI/IEEE Std. 91-1984 and IEC Publication 617-12.
Pin numbers shown are for D, J, N, and W packages.

description

These universal, monolithic, nine-bit parity generators/checkers utilize Schottky-clamped TTL high-performance circuitry and feature odd/even outputs to faciliate operation of either odd or even parity application. The word-length capability is easily expanded by cascading as shown under typical application data.

Series 54LS/74LS and Series 54S/74S parity generators/checkers offer the designer a trade-off between reduced power consumption and high performance. These devices can be used to upgrade the performance of most systems utilizing the '180 parity generator/checker. Although the 'LS280 and 'S280 are implemented without expander inputs, the corresponding function is provided by the availability of an input at pin 4 and the absence of any internal connection at pin 3. This permits the 'LS280 and 'S280 to be substituted for the '180 in existing designs to produce an identical function even if 'LS280's and 'S280's are mixed with existing '180's.

These devices are fully compatible with most other TTL circuits. All 'LS280 and 'S280 inputs are buffered to lower the drive requirements to one Series 54LS/74LS or Series 54S/74S standard load, respectively.

PRODUCTION DATA information is current as of publication date. Products conform to specifications per the terms of Texas Instruments standard warranty. Production processing does not necessarily include testing of all parameters.

Copyright © 1988, Texas Instruments Incorporated

logic diagram (positive logic)

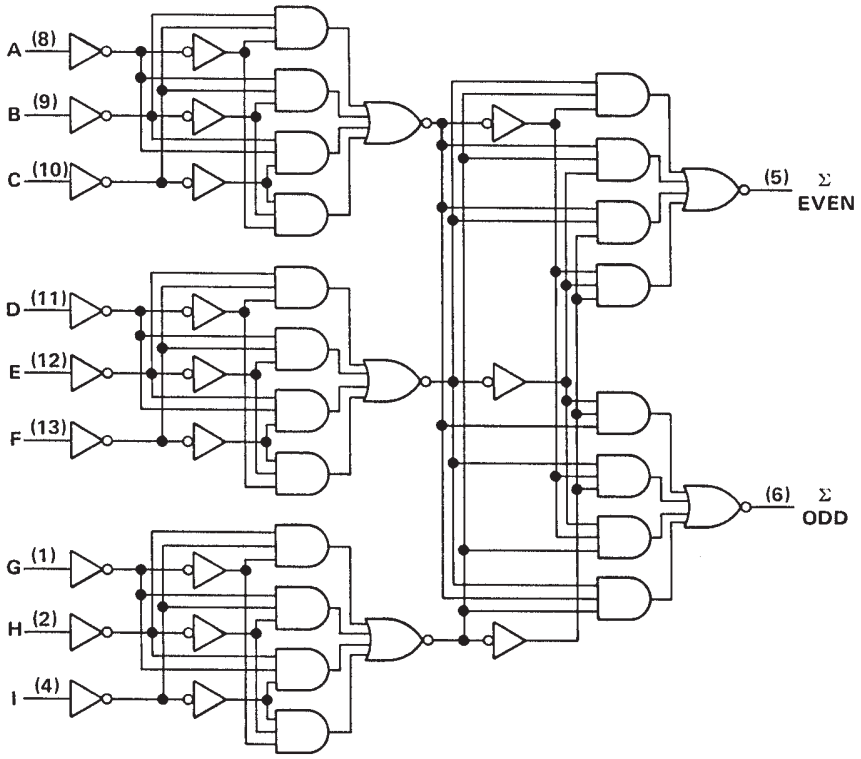

Pin numbers shown are for D, J, N, and W packages.

TYPICAL APPLICATION DATA

25-LINE PARITY/GENERATOR CHECKER

Three 'LS280's or 'S280's can be used to implement a 25-line parity generator/checker. This arrangement will provide parity in typically 75 or 25 nanoseconds respectively.

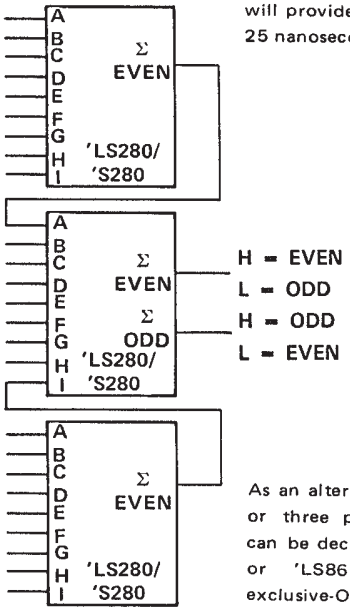

As an alternative, the outputs of two or three parity generators/checkers can be decoded with a 2-input ('S86 or 'LS86) or 3-input ('S135) exclusive-OR gate for 18- or 27-line parity applications.

81-LINE PARITY/GENERATOR CHECKER

Longer word lengths can be implemented by cascading 'LS280's or 'S280's. As shown here, parity can be generated for word lengths up to 81 bits in typically 75 or 25 nanoseconds respectively.

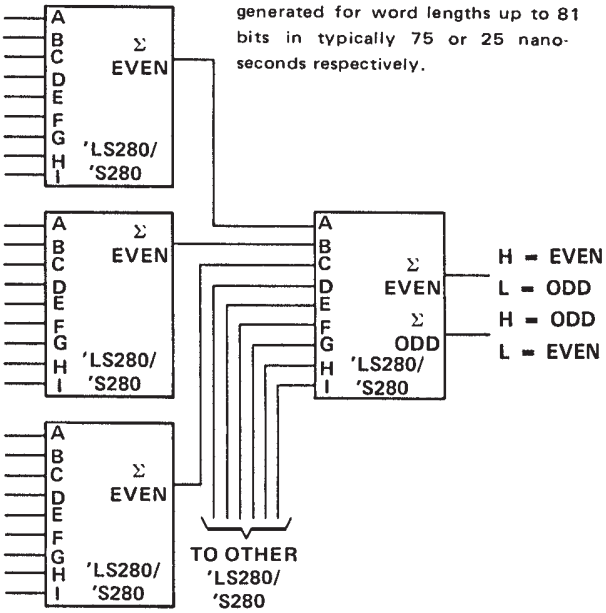

FAIRCHILD SEMICONDUCTOR™

ANEXA 9

August 1986
Revised March 2000

DM74LS83A
4-Bit Binary Adder with Fast Carry

General Description

These full adders perform the addition of two 4-bit binary numbers. The sum (Σ) outputs are provided for each bit and the resultant carry (C4) is obtained from the fourth bit. These adders feature full internal look ahead across all four bits. This provides the system designer with partial look-ahead performance at the economy and reduced package count of a ripple-carry implementation.

The adder logic, including the carry, is implemented in its true form meaning that the end-around carry can be accomplished without the need for logic or level inversion.

Features

- Full-carry look-ahead across the four bits
- Systems achieve partial look-ahead performance with the economy of ripple carry
- Typical add times
  - Two 8-bit words 25 ns
  - Two 16-bit words 45 ns
- Typical power dissipation per 4-bit adder 95 mW

Ordering Code:

Order Number	Package Number	Package Description
DM74LS83AN	N16E	16-Lead Plastic Dual-In-Line Package (PDIP), JEDEC MS-001, 0.300 Wide

Connection Diagram

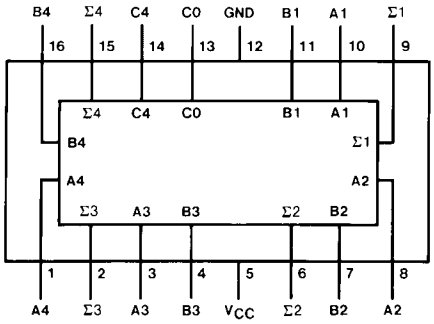

© 2000 Fairchild Semiconductor Corporation

Truth Table

Inputs				Outputs					
				When C0 = L			When C0 = H		
						When C2 = L			When C2 = H
A1 / A3	B1 / B3	A2 / A4	B2 / B4	Σ1 / Σ3	Σ2 / Σ4	C2 / C4	Σ1 / Σ3	Σ2 / Σ4	C2 / C4
L	L	L	L	L	L	L	H	L	L
H	L	L	L	H	L	L	L	H	L
L	H	L	L	H	L	L	L	H	L
H	H	L	L	L	H	L	H	H	L
L	L	H	L	L	H	L	H	H	L
H	L	H	L	H	H	L	L	L	H
L	H	H	L	H	H	L	L	L	H
H	H	H	L	L	L	H	H	L	H
L	L	L	H	L	H	L	H	H	L
H	L	L	H	H	H	L	L	L	H
L	H	L	H	H	H	L	L	L	H
H	H	L	H	L	L	H	H	L	H
L	L	H	H	L	L	H	H	L	H
H	L	H	H	H	L	H	L	H	H
L	H	H	H	H	L	H	L	H	H
H	H	H	H	L	H	H	H	H	H

H = HIGH Level, L = LOW Level

Input conditions at A1, B1, A2, B2, and C0 are used to determine outputs ∑1 and ∑2 and the value of the internal carry C2. The values at C2, A3, B3, A4, and B4 are then used to determine outputs ∑3, ∑4, and C4.

Logic Diagram

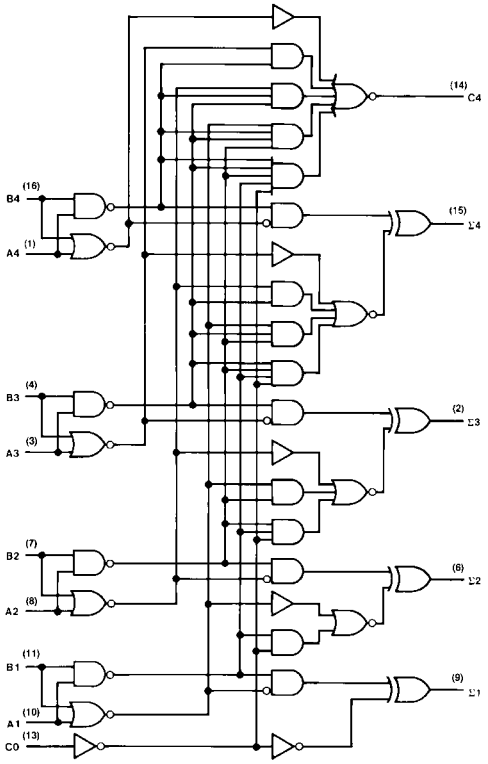

SN5473, SN54LS73A, SN7473, SN74LS73A
DUAL J-K FLIP-FLOPS WITH CLEAR

SDLS118 – DECEMBER 1983 – REVISED MARCH 1988

- **Package Options Include Plastic "Small Outline" Packages, Flat Packages, and Plastic and Ceramic DIPs**
- **Dependable Texas Instruments Quality and Reliability**

description

The '73, and 'H73, contain two independent J-K flip-flops with individual J-K, clock, and direct clear inputs. The '73, and 'H73, are positive pulse-triggered flip-flops. J-K input is loaded into the master while the clock is high and transferred to the slave on the high-to-low transition. For these devices the J and K inputs must be stable while the clock is high.

The 'LS73A contains two independent negative-edge-triggered flip-flops. The J and K inputs must be stable one setup time prior to the high-to-low clock transition for predictable operation. When the clear is low, it overrides the clock and data inputs forcing the Q output low and the $\overline{Q}$ output high.

The SN5473, SN54H73, and the SN54LS73A are characterized for operation over the full military temperature range of −55°C to 125°C. The SN7473, and the SN74LS73A are characterized for operation from 0°C to 70°C.

SN5473, SN54LS73A . . . J OR W PACKAGE
SN7473 . . . N PACKAGE
SN74LS73A . . . D OR N PACKAGE
(TOP VIEW)

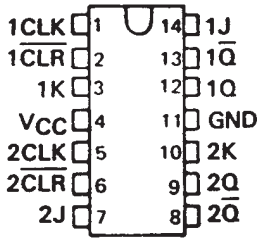

'73
FUNCTION TABLE

INPUTS				OUTPUTS	
$\overline{CLR}$	CLK	J	K	Q	$\overline{Q}$
L	X	X	X	L	H
H	↑	L	L	Q_0	$\overline{Q}_0$
H	↑	H	L	H	L
H	↑	L	H	L	H
H	↑	H	H	TOGGLE	

'LS73A
FUNCTION TABLE

INPUTS				OUTPUTS	
$\overline{CLR}$	CLK	J	K	Q	$\overline{Q}$
L	X	X	X	L	H
H	↓	L	L	Q_0	$\overline{Q}_0$
H	↓	H	L	H	L
H	↓	L	H	L	H
H	↓	H	H	TOGGLE	
H	H	X	X	Q_0	$\overline{Q}_0$

FOR CHIP CARRIER INFORMATION, CONTACT THE FACTORY

PRODUCTION DATA information is current as of publication date. Products conform to specifications per the terms of Texas Instruments standard warranty. Production processing does not necessarily include testing of all parameters.

Copyright © 1988, Texas Instruments Incorporated

logic symbols†

'73

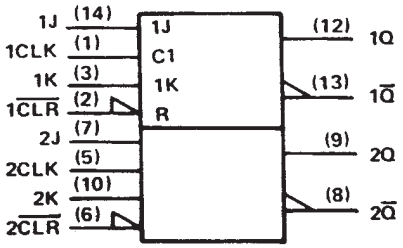

'LS73A

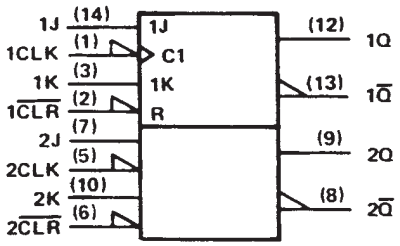

†These symbols are in accordance with ANSI/IEEE Std. 91-1984 and IEC Publication 617-12.

schematics of inputs and outputs

'73

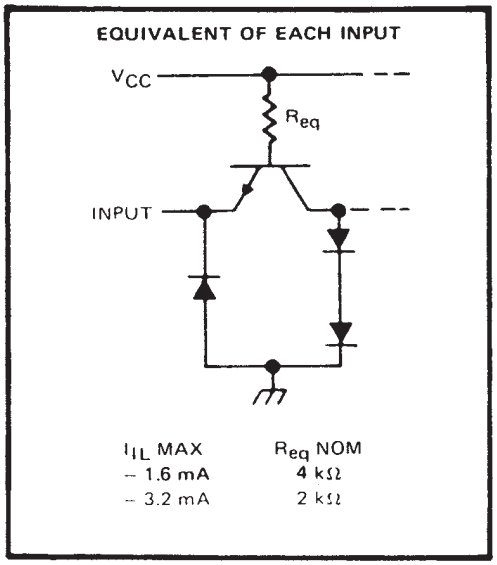

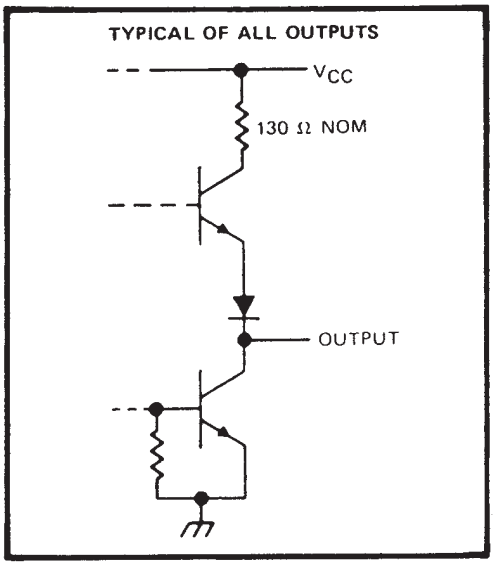

'LS73

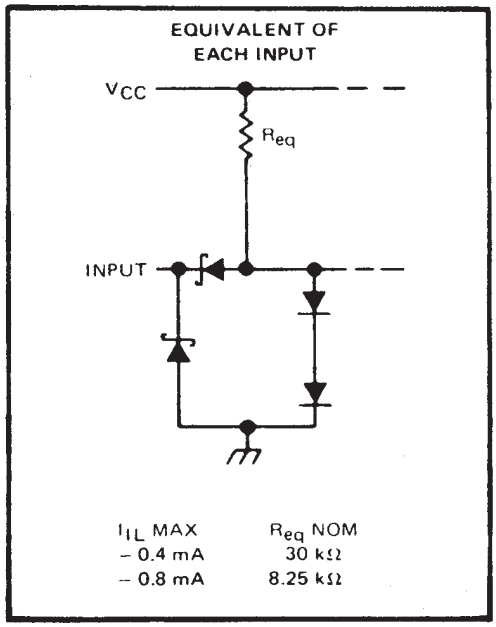

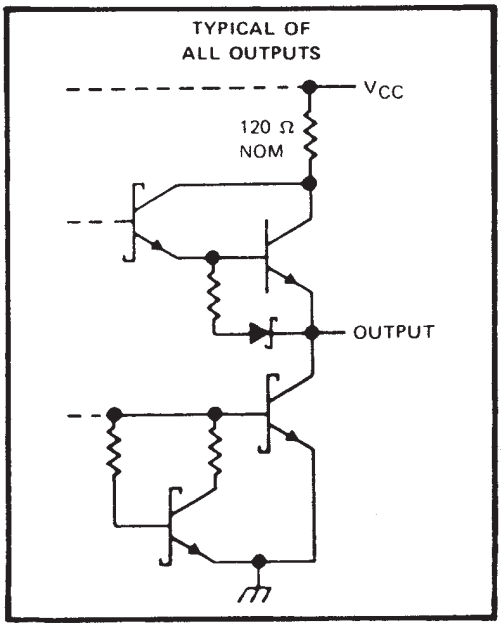

logic diagrams (positive logic)

'73

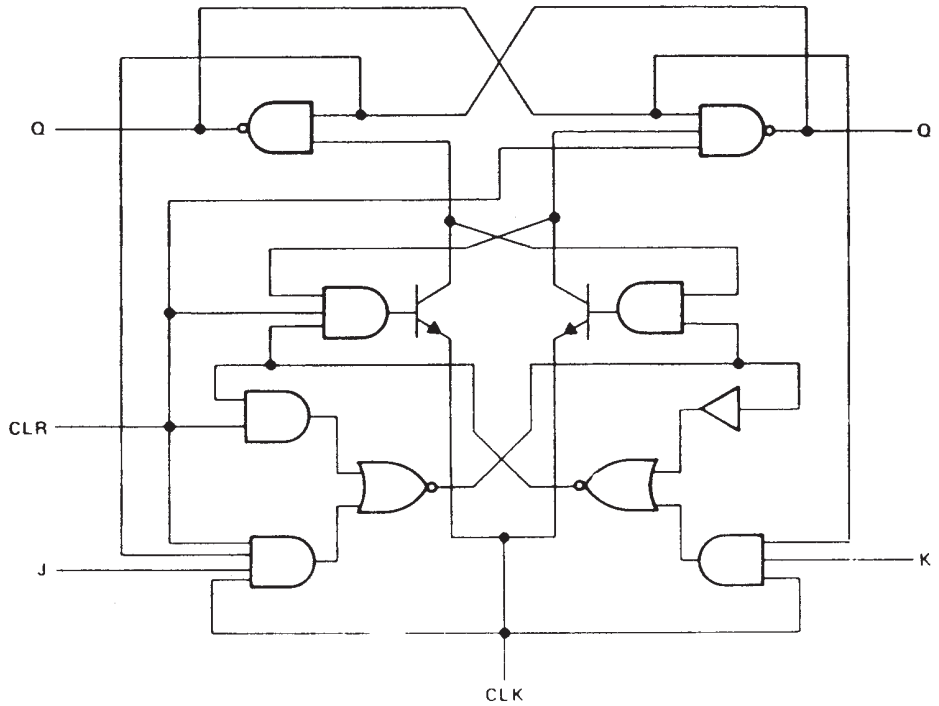

'LS73A

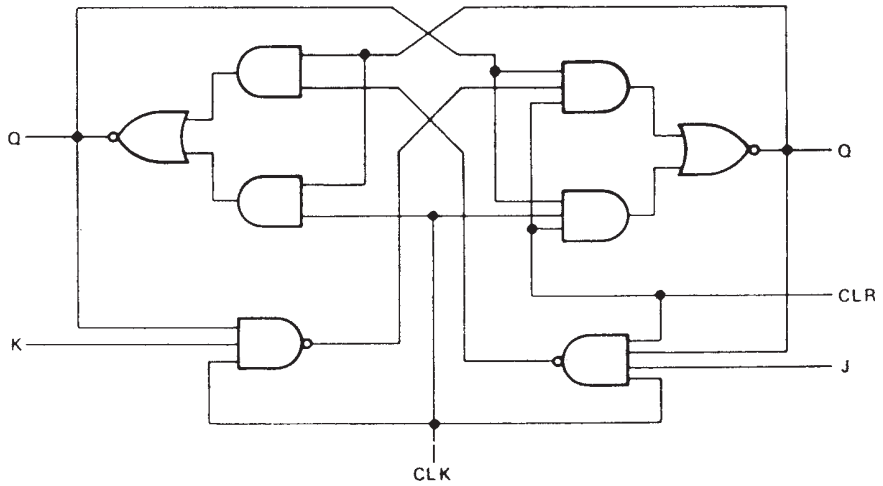

absolute maximum ratings over operating free-air temperature range (unless otherwise noted)

Supply voltage, V_{CC} (See Note 1)		7 V
Input voltage: '73		5.5 V
'LS73A		7 V
Operating free-air temperature range:	SN54'	−55°C to 125°C
	SN74'	0° C to 70°C
Storage temperature range		−65°C to 150°C

NOTE 1: Voltage values are with respect to network ground terminal.

ANEXA 11

SN54LS169B, SN54S169
SN74LS169B, SN74S169
SYNCHRONOUS 4-BIT UP/DOWN BINARY COUNTERS

SDLS134 – OCTOBER 1976 – REVISED MARCH 1988

- **Programmable Look-Ahead Up/Down Binary Counters**
- **Fully Synchronous Operation for Counting and Programming**
- **Internal Look-Ahead for Fast Counting**
- **Carry Output for n-Bit Cascading**
- **Fully Independent Clock Circuit**

SN54LS169B, SN54S169 . . . J OR W PACKAGE
SN74LS169B, SN74S169 . . . D OR N PACKAGE
(TOP VIEW)

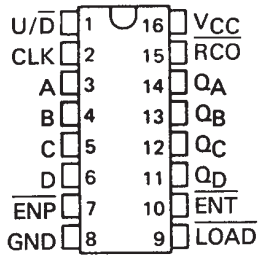

SN54LS169B, SN54S169 . . . FK PACKAGE
(TOP VIEW)

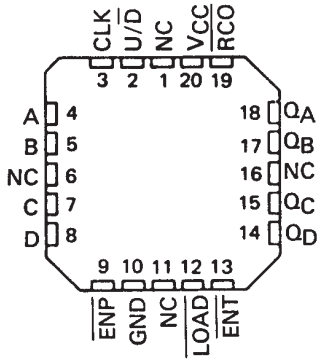

NC-No internal connection

description

These synchronous presettable counters feature an internal carry look-ahead for cascading in high speed counting applications. The 'LS169B and 'S169 are 4-bit binary counters. Synchronous operation is provided by having all flip-flops clocked simultaneously so that the outputs change coincident with each other when so instructed by the count-enable inputs and internal gating. This mode of operation helps eliminate the output counting spikes that are normally associated with asynchronous (ripple-clock) counters. A buffered clock input triggers the four master-slave flip-flops on the rising (positive-going) edge of the clock waveform.

These counters are fully programmable; that is the outputs may each be preset to either level. The load input circuitry allows loading with the carry-enable output of cascaded counters. As loading is synchronous, setting up a low level at the load input disables the counter and causes the outputs to agree with the data inputs after the next clock pulse.

TYPE	TYPICAL MAXIMUM CLOCK FREQUENCY		TYPICAL POWER DISSIPATION
	COUNTING UP	COUNTING DOWN	
'LS169B	35MHz	35MHz	100mW
'S169	70MHz	55MHz	500mW

The carry look-ahead circuitry provides for cascading counters for n-bit synchronous applications without additional gating. Instrumental in accomplishing this function are two count-enable inputs and a carry output. Both count enable inputs ($\overline{ENP}$, $\overline{ENT}$) must be low to count. The direction of the count is determined by the level of the up/down input. When the input is high, the counter counts up; when low, it counts down. Input $\overline{ENT}$ is fed forward to enable the carry output. The carry output thus enabled will produce a low-level output pulse with a duration approximately equal to the high portion of the Q_A output when counting up and approximately equal to the low portion of the Q_A output when counting down. This low-level overflow carry pulse can be used to enable successive cascaded stages. Transitions at the $\overline{ENP}$ or $\overline{ENT}$ inputs are allowed regardless of the level of the clock input. All inputs are diode-clamped to minimize transmission-line effects, thereby simplifying system design.

These counters feature a fully independent clock circuit. Changes at control inputs ($\overline{ENP}$, $\overline{ENT}$, $\overline{LOAD}$, U/$\overline{D}$) that will modify the operating mode have no effect until clocking occurs. The function of the counter (whether enabled, disabled, loading, or counting) will be dictated solely by the conditions meeting the stable setup and hold times.

PRODUCTION DATA information is current as of publication date. Products conform to specifications per the terms of Texas Instruments standard warranty. Production processing does not necessarily include testing of all parameters.

Copyright © 1988, Texas Instruments Incorporated

logic symbol†

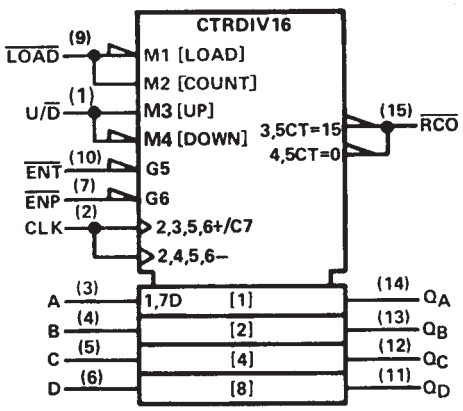

†This symbol is in accordance with ANSI/IEEE Std. 91-1984 and IEC Publication 617-12.
Pin numbers shown are for D, J, N, and W packages.

logic diagram (positive logic)

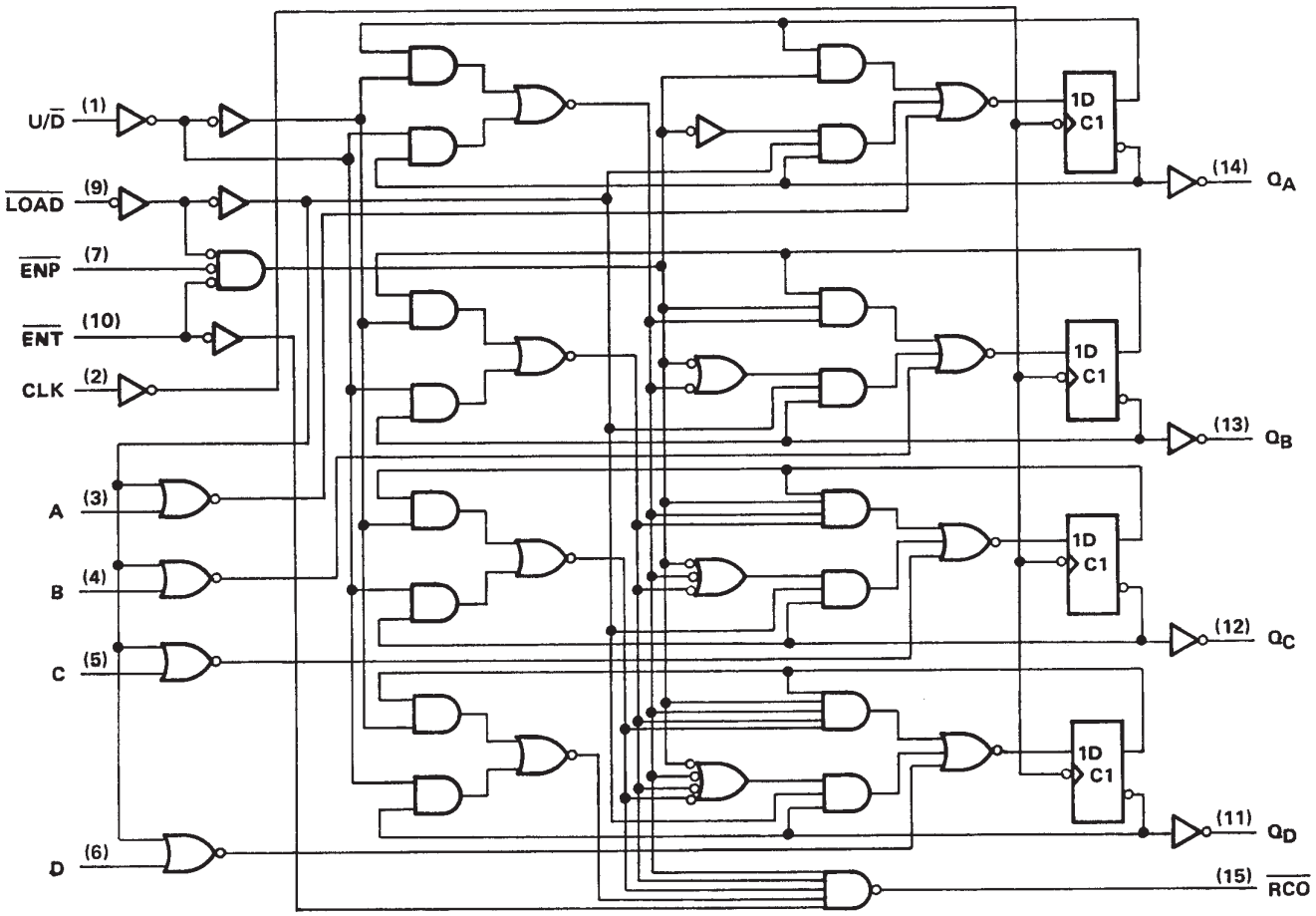

Pin numbers shown are for D, J, N, and W packages.

logic diagram (positive logic)

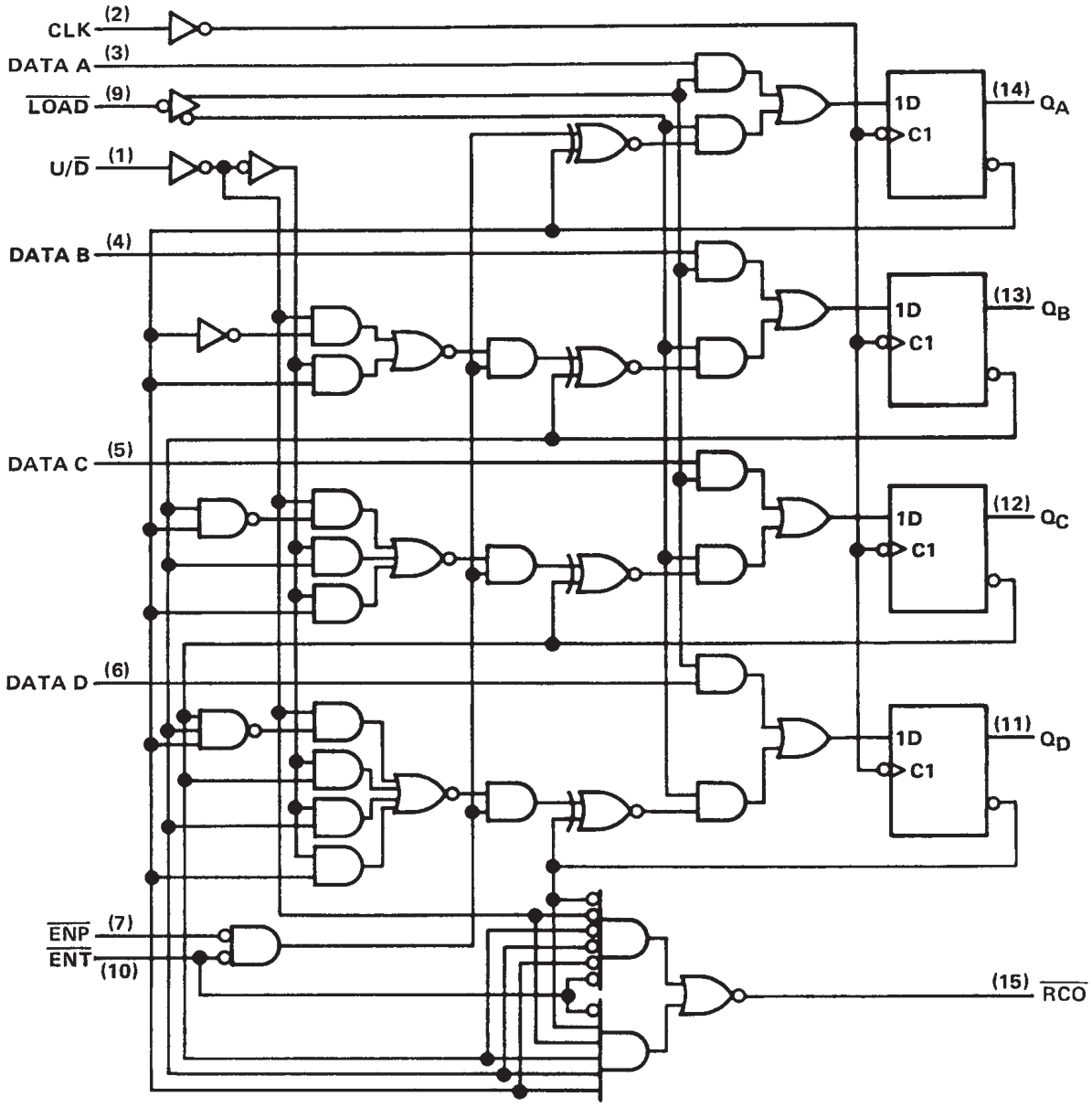

Pin numbers shown are for D, J, N, and W packages.

typical load, count, and inhibit sequences

Illustrated below is the following sequence:

1. Load (preset) to binary thirteen.
2. Count up to fourteen, fifteen (maximum), zero, one, and two.
3. Inhibit
4. Count down to one, zero (minimum), fifteen, fourteen, and thirteen

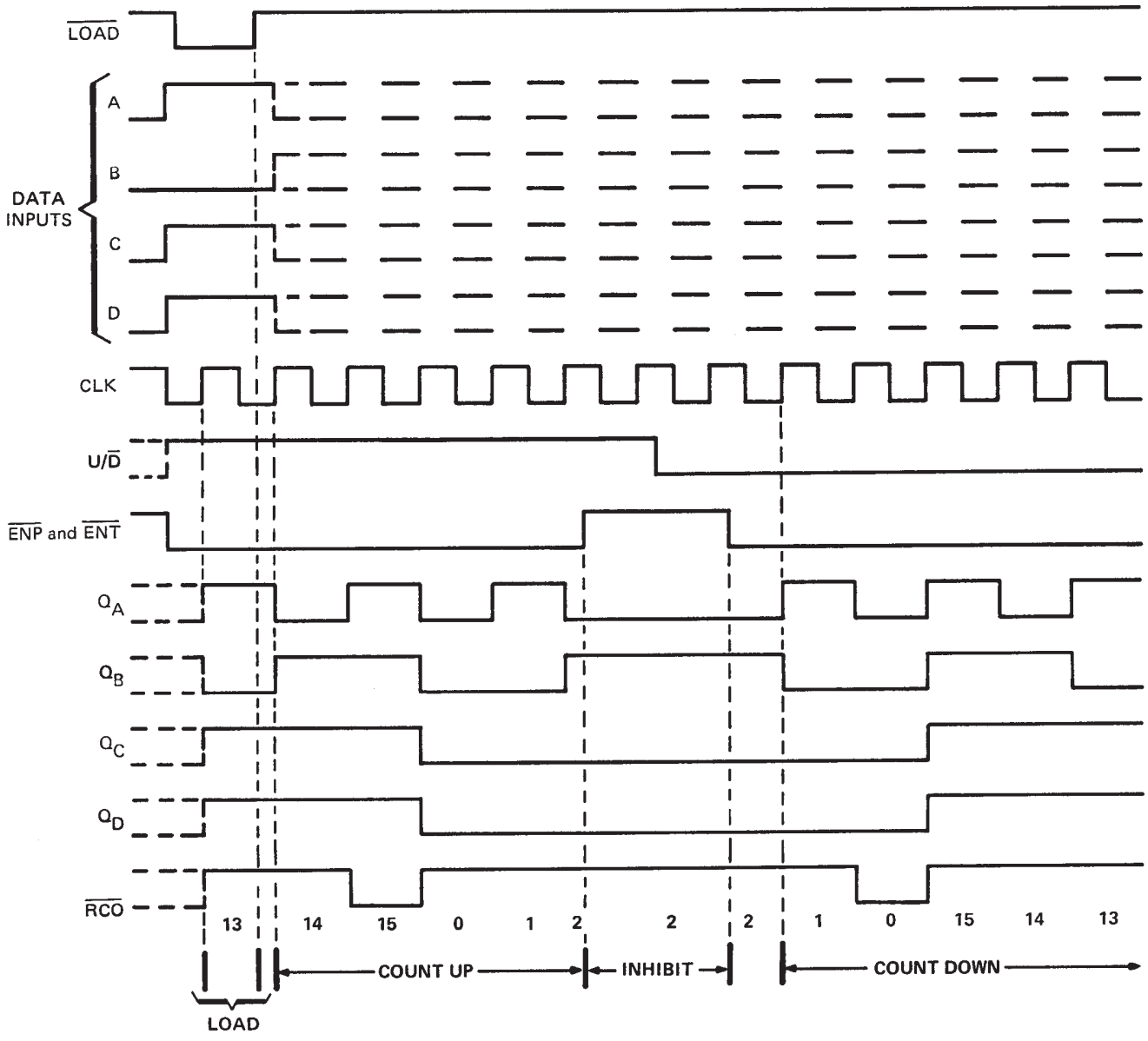

ANEXA 12

SN54174, SN54175, SN54LS174, SN54LS175, SN54S174, SN54S175, SN74174, SN74175, SN74LS174, SN74LS175, SN74S174, SN74S175 HEX/QUADRUPLE D-TYPE FLIP-FLOPS WITH CLEAR

SDLS068A – DECEMBER 1972 – REVISED OCTOBER 2001

'174, 'LS174, 'S174 . . . HEX D-TYPE FLIP-FLOPS
'175, 'LS175, 'S175 . . . QUADRUPLE D-TYPE FLIP-FLOPS

- '174, 'LS174, 'S174 Contain Six Flip-Flops with Single-Rail Outputs
- '175, 'LS175, 'S175 Contain Four Flip-Flops with Double-Rail Outputs
- Three Performance Ranges Offered: See Table Lower Right
- Buffered Clock and Direct Clear Inputs
- Individual Data Input to Each Flip-Flop
- Applications include:
  - Buffer/Storage Registers
  - Shift Registers
  - Pattern Generators

SN54174, SN54LS174, SN54S174 . . . J OR W PACKAGE
SN74174 . . . N PACKAGE
SN74LS174, SN74S174 . . . D OR N PACKAGE
(TOP VIEW)

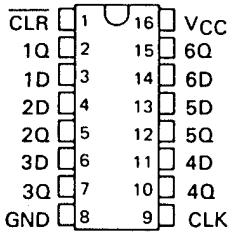

SN54LS174, SN54S174 . . . FK PACKAGE
(TOP VIEW)

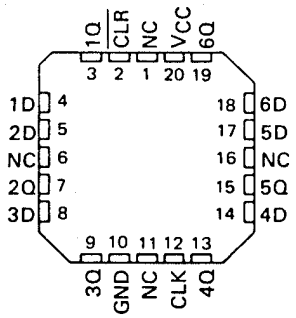

description

These monolithic, positive-edge-triggered flip-flops utilize TTL circuitry to implement D-type flip-flop logic. All have a direct clear input, and the '175, 'LS175, and 'S175 feature complementary outputs from each flip-flop.

Information at the D inputs meeting the setup time requirements is transferred to the Q outputs on the positive-going edge of the clock pulse. Clock triggering occurs at a particular voltage level and is not directly related to the transition time of the positive-going pulse. When the clock input is at either the high or low level, the D input signal has no effect at the output.

These circuits are fully compatible for use with most TTL circuits.

FUNCTION TABLE
(EACH FLIP-FLOP)

INPUTS			OUTPUTS	
CLEAR	CLOCK	D	Q	$\bar{Q}$†
L	X	X	L	H
H	↑	H	H	L
H	↑	L	L	H
H	L	X	Q_0	$\bar{Q}_0$

H = high level (steady state)
L = low level (steady state)
X = irrelevant
↑ = transition from low to high level
Q_0 = the level of Q before the indicated steady-state input conditions were established.
† = '175, 'LS175, and 'S175 only

TYPES	TYPICAL MAXIMUM CLOCK FREQUENCY	TYPICAL POWER DISSIPATION PER FLIP-FLOP
'174, '175	35 MHz	38 mW
'LS174, 'LS175	40 MHz	14 mW
'S174, 'S175	110 MHz	75 mW

SN54175, SN54LS175, SN54S175 . . . J OR W PACKAGE
SN74175 . . . N PACKAGE
SN74LS175, SN74S175 . . . D OR N PACKAGE
(TOP VIEW)

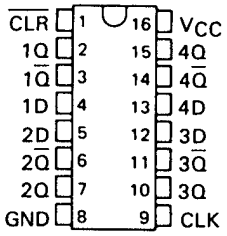

SN54LS175, SN54S175 . . . FK PACKAGE
(TOP VIEW)

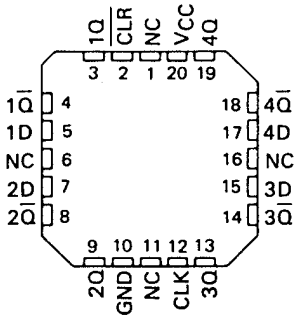

NC – No internal connection

PRODUCTION DATA information is current as of publication date. Products conform to specifications per the terms of Texas Instruments standard warranty. Production processing does not necessarily include testing of all parameters.

Copyright © 2001, Texas Instruments Incorporated

logic symbols†

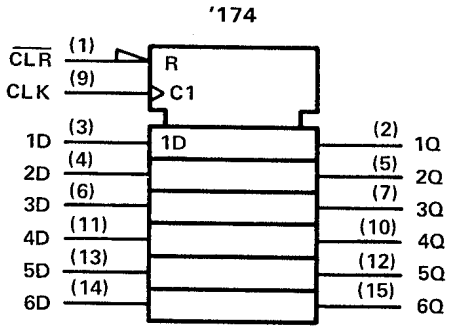

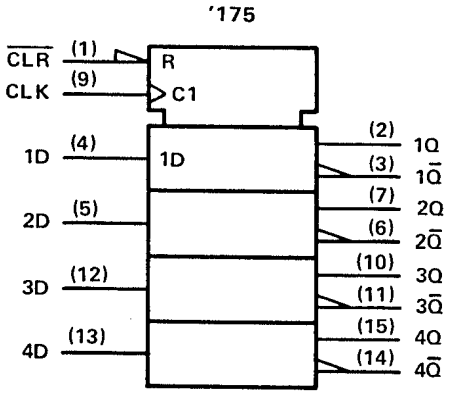

†These symbols are in accordance with ANSI/IEEE Std. 91-1984 and IEC Publication 617-12.
Pin numbers shown are for D, J, N, and W packages.

logic diagrams (positive logic)

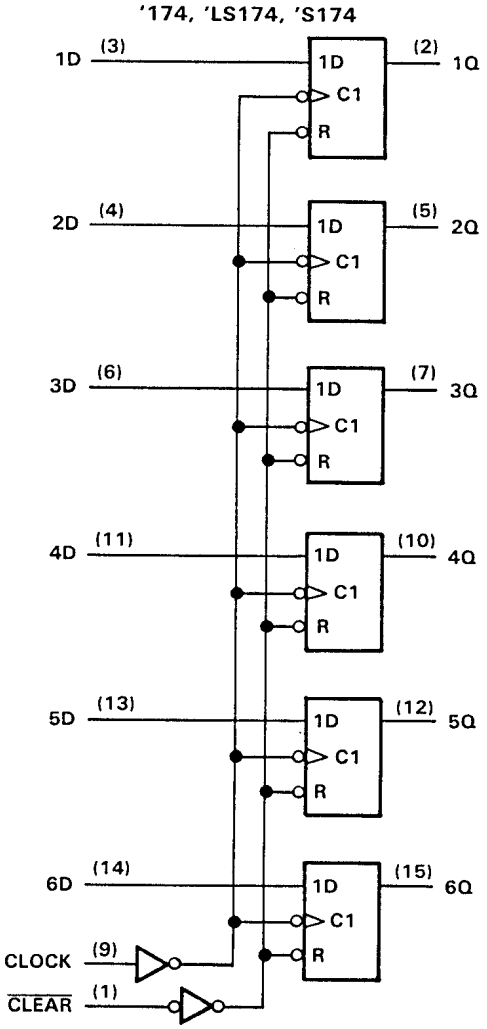

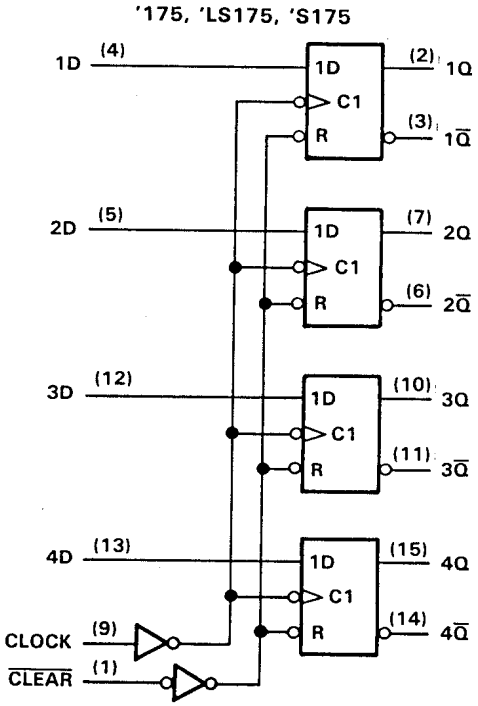

Pin numbers shown are for D, J, N, and W packages.

SN54HC00, SN74HC00
QUADRUPLE 2-INPUT POSITIVE-NAND GATES

SCLS181E – DECEMBER 1982 – REVISED AUGUST 2003

- **Wide Operating Voltage Range of 2 V to 6 V**
- **Outputs Can Drive Up To 10 LSTTL Loads**
- **Low Power Consumption, 20-μA Max I_{CC}**
- **Typical t_{pd} = 8 ns**
- **±4-mA Output Drive at 5 V**
- **Low Input Current of 1 μA Max**

SN54HC00 . . . J OR W PACKAGE
SN74HC00 . . . D, DB, N, NS, OR PW PACKAGE
(TOP VIEW)

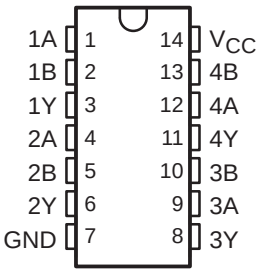

SN54HC00 . . . FK PACKAGE
(TOP VIEW)

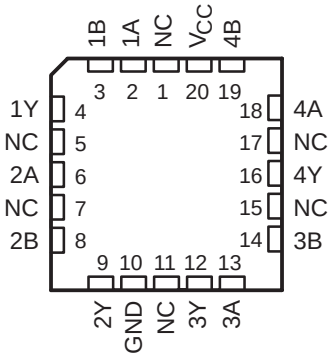

NC – No internal connection

description/ordering information

The ’HC00 devices contain four independent 2-input NAND gates. They perform the Boolean function $Y = \overline{A \bullet B}$ or $Y = \overline{A} + \overline{B}$ in positive logic.

ORDERING INFORMATION

T_A	PACKAGE†		ORDERABLE PART NUMBER	TOP-SIDE MARKING
–40°C to 85°C	PDIP – N	Tube of 25	SN74HC00N	SN74HC00N
	SOIC – D	Tube of 50	SN74HC00D	HC00
		Reel of 2500	SN74HC00DR	
		Reel of 250	SN74HC00DT	
	SOP – NS	Reel of 2000	SN74HC00NSR	HC00
	SSOP – DB	Reel of 2000	SN74HC00DBR	HC00
	TSSOP – PW	Tube of 90	SN74HC00PW	HC00
		Reel of 2000	SN74HC00PWR	
		Reel of 250	SN74HC00PWT	
–55°C to 125°C	CDIP – J	Tube of 25	SNJ54HC00J	SNJ54HC00J
	CFP – W	Tube of 150	SNJ54HC00W	SNJ54HC00W
	LCCC – FK	Tube of 55	SNJ54HC00FK	SNJ54HC00FK

† Package drawings, standard packing quantities, thermal data, symbolization, and PCB design guidelines are available at www.ti.com/sc/package.

Please be aware that an important notice concerning availability, standard warranty, and use in critical applications of Texas Instruments semiconductor products and disclaimers thereto appears at the end of this data sheet.

PRODUCTION DATA information is current as of publication date. Products conform to specifications per the terms of Texas Instruments standard warranty. Production processing does not necessarily include testing of all parameters.

Copyright © 2003, Texas Instruments Incorporated

On products compliant to MIL-PRF-38535, all parameters are tested unless otherwise noted. On all other products, production processing does not necessarily include testing of all parameters.

FUNCTION TABLE
(each gate)

INPUTS		OUTPUT
A	B	Y
H	H	L
L	X	H
X	L	H

logic diagram (positive logic)

absolute maximum ratings over operating free-air temperature range (unless otherwise noted)†

Supply voltage range, V_{CC} . . . . . –0.5 V to 7 V
Input clamp current, I_{IK} ($V_I < 0$ or $V_I > V_{CC}$) (see Note 1) . . . . . ±20 mA
Output clamp current, I_{OK} ($V_O < 0$ or $V_O > V_{CC}$) (see Note 1) . . . . . ±20 mA
Continuous output current, I_O ($V_O = 0$ to V_{CC}) . . . . . ±25 mA
Continuous current through V_{CC} or GND . . . . . ±50 mA
Package thermal impedance, θ_{JA} (see Note 2): D package . . . . . 86°C/W
DB package . . . . . 96°C/W
N package . . . . . 80°C/W
NS package . . . . . 76°C/W
PW package . . . . . 113°C/W
Storage temperature range, T_{stg} . . . . . –65°C to 150°C

† Stresses beyond those listed under “absolute maximum ratings” may cause permanent damage to the device. These are stress ratings only, and functional operation of the device at these or any other conditions beyond those indicated under “recommended operating conditions” is not implied. Exposure to absolute-maximum-rated conditions for extended periods may affect device reliability.

NOTES: 1. The input and output voltage ratings may be exceeded if the input and output current ratings are observed.
2. The package thermal impedance is calculated in accordance with JESD 51-7.

recommended operating conditions (see Note 3)

			SN54HC00			SN74HC00			UNIT
			MIN	NOM	MAX	MIN	NOM	MAX	
V_{CC}	Supply voltage		2	5	6	2	5	6	V
V_{IH}	High-level input voltage	V_{CC} = 2 V	1.5			1.5			V
		V_{CC} = 4.5 V	3.15			3.15			
		V_{CC} = 6 V	4.2			4.2			
V_{IL}	Low-level input voltage	V_{CC} = 2 V			0.5			0.5	V
		V_{CC} = 4.5 V			1.35			1.35	
		V_{CC} = 6 V			1.8			1.8	
V_I	Input voltage		0		V_{CC}	0		V_{CC}	V
V_O	Output voltage		0		V_{CC}	0		V_{CC}	V
$\Delta t/\Delta v$	Input transition rise/fall time	V_{CC} = 2 V			1000			1000	ns
		V_{CC} = 4.5 V			500			500	
		V_{CC} = 6 V			400			400	
T_A	Operating free-air temperature		–55		125	–40		85	°C

NOTE 3: All unused inputs of the device must be held at V_{CC} or GND to ensure proper device operation. Refer to the TI application report, *Implications of Slow or Floating CMOS Inputs*, literature number SCBA004.

- **Wide Operating Voltage Range of 2 V to 6 V**
- **Outputs Can Drive Up To 10 LSTTL Loads**
- **Low Power Consumption, 20-μA Max I_{CC}**
- **Typical t_{pd} = 8 ns**
- **±4-mA Output Drive at 5 V**
- **Low Input Current of 1 μA Max**

SN54HC04 . . . J OR W PACKAGE
SN74HC04 . . . D, N, NS, OR PW PACKAGE
(TOP VIEW)

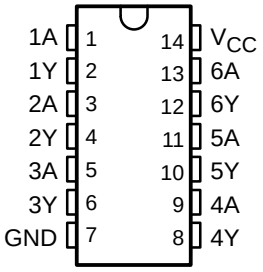

SN54HC04 . . . FK PACKAGE
(TOP VIEW)

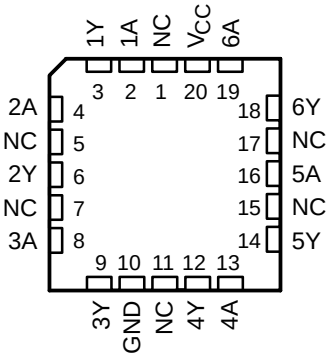

NC – No internal connection

description/ordering information

The ’HC04 devices contain six independent inverters. They perform the Boolean function $Y = \overline{A}$ in positive logic.

ORDERING INFORMATION

T_A	PACKAGE†		ORDERABLE PART NUMBER	TOP-SIDE MARKING
–40°C to 85°C	PDIP – N	Tube of25	SN74HC04N	SN74HC04N
	SOIC – D	Tube of 50	SN74HC04D	HC04
		Reel of 2500	SN74HC04DR	
		Reel of 250	SN74HC04DT	
	SOP – NS	Reel of 2000	SN74HC04NSR	HC04
	TSSOP – PW	Tube of 90	SN74HC04PW	HC04
		Reel of 2000	SN74HC04PWR	
		Reel of 250	SN74HC04PWT	
–55°C to 125°C	CDIP – J	Tube of 25	SNJ54HC04J	SNJ54HC04J
	CFP – W	Tube of 150	SNJ54HC04W	SNJ54HC04W
	LCCC – FK	Tube of 55	SNJ54HC04FK	SNJ54HC04FK

† Package drawings, standard packing quantities, thermal data, symbolization, and PCB design guidelines are available at www.ti.com/sc/package.

FUNCTION TABLE
(each inverter)

INPUT A	OUTPUT Y
H	L
L	H

Please be aware that an important notice concerning availability, standard warranty, and use in critical applications of Texas Instruments semiconductor products and disclaimers thereto appears at the end of this data sheet.

PRODUCTION DATA information is current as of publication date. Products conform to specifications per the terms of Texas Instruments standard warranty. Production processing does not necessarily include testing of all parameters.

Copyright © 2003, Texas Instruments Incorporated

On products compliant to MIL-PRF-38535, all parameters are tested unless otherwise noted. On all other products, production processing does not necessarily include testing of all parameters.

logic diagram (positive logic)

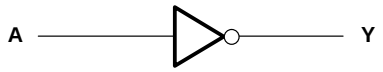

absolute maximum ratings over operating free-air temperature range (unless otherwise noted)†

Supply voltage range, V_{CC} . . . . . –0.5 V to 7 V
Input clamp current, I_{IK} (V_I < 0 or V_I > V_{CC}) (see Note 1) . . . . . ±20 mA
Output clamp current, I_{OK} (V_O < 0 or V_O > V_{CC}) (see Note 1) . . . . . ±20 mA
Continuous output current, I_O (V_O = 0 to V_{CC}) . . . . . ±25 mA
Continuous current through V_{CC} or GND . . . . . ±50 mA
Package thermal impedance, θ_{JA} (see Note 2): D package . . . . . 86°C/W
N package . . . . . 80°C/W
NS package . . . . . 76°C/W
PW package . . . . . 113°C/W
Storage temperature range, T_{stg} . . . . . –65°C to 150°C

† Stresses beyond those listed under “absolute maximum ratings” may cause permanent damage to the device. These are stress ratings only, and functional operation of the device at these or any other conditions beyond those indicated under “recommended operating conditions” is not implied. Exposure to absolute-maximum-rated conditions for extended periods may affect device reliability.

NOTES: 1. The input and output voltage ratings may be exceeded if the input and output current ratings are observed.
2. The package thermal impedance is calculated in accordance with JESD 51-7.

recommended operating conditions (see Note 3)

			SN54HC04			SN74HC04			UNIT
			MIN	NOM	MAX	MIN	NOM	MAX	
V_{CC}	Supply voltage		2	5	6	2	5	6	V
V_{IH}	High-level input voltage	V_{CC} = 2 V	1.5			1.5			V
		V_{CC} = 4.5 V	3.15			3.15			
		V_{CC} = 6 V	4.2			4.2			
V_{IL}	Low-level input voltage	V_{CC} = 2 V			0.5			0.5	V
		V_{CC} = 4.5 V			1.35			1.35	
		V_{CC} = 6 V			1.8			1.8	
V_I	Input voltage		0		V_{CC}	0		V_{CC}	V
V_O	Output voltage		0		V_{CC}	0		V_{CC}	V
$\Delta t/\Delta v$	Input transition rise/fall time	V_{CC} = 2 V			1000			1000	ns
		V_{CC} = 4.5 V			500			500	
		V_{CC} = 6 V			400			400	
T_A	Operating free-air temperature		–55		125	–40		85	°C

NOTE 3: All unused inputs of the device must be held at V_{CC} or GND to ensure proper device operation. Refer to the TI application report, *Implications of Slow or Floating CMOS Inputs*, literature number SCBA004.

ANEXA 15

SN54HC20, SN74HC20
DUAL 4-INPUT POSITIVE-NAND GATES

SCLS086F − DECEMBER 1982 − REVISED AUGUST 2003

- **Wide Operating Voltage Range of 2 V to 6 V**
- **Outputs Can Drive Up To 10 LSTTL Loads**
- **Low Power Consumption, 20-μA Max I_{CC}**
- **Typical t_{pd} = 11 ns**
- **±4-mA Output Drive at 5 V**
- **Low Input Current of 1 μA Max**

SN54HC20 . . . J OR W PACKAGE
SN74HC20 . . . D, DB, N, NS, OR PW PACKAGE
(TOP VIEW)

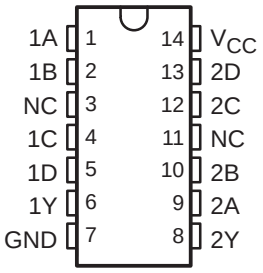

SN54HC20 . . . FK PACKAGE
(TOP VIEW)

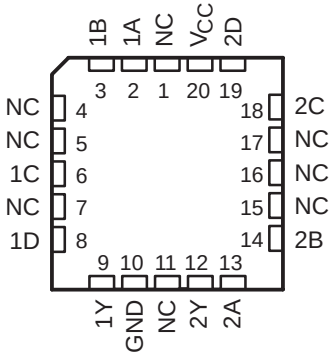

NC − No internal connection

description/ordering information

The ’HC20 devices contain two independent 4-input NAND gates. They perform the Boolean function $Y = \overline{A \bullet B \bullet C \bullet D}$ or $Y = \overline{A} + \overline{B} + \overline{C} + \overline{D}$ in positive logic.

ORDERING INFORMATION

T_A	PACKAGE†		ORDERABLE PART NUMBER	TOP-SIDE MARKING
−40°C to 85°C	PDIP − N	Tube of 25	SN74HC20N	SN74HC20N
	SOIC − D	Tube of 50	SN74HC20D	HC20
		Reel of 2500	SN74HC20DR	
		Reel of 250	SN74HC20DT	
	SOP − NS	Reel of 2000	SN74HC20NSR	HC20
	SSOP − DB	Reel of 2000	SN74HC20DBR	HC20
	TSSOP − PW	Tube of 90	SN74HC20PW	HC20
		Reel of 2000	SN74HC20PWR	
		Reel of 250	SN74HC20PWT	
−55°C to 125°C	CDIP − J	Tube of 25	SNJ54HC20J	SNJ54HC20J
	CFP − W	Tube of 150	SNJ54HC20W	SNJ54HC20W
	LCCC − FK	Tube of 55	SNJ54HC20FK	SNJ54HC20FK

† Package drawings, standard packing quantities, thermal data, symbolization, and PCB design guidelines are available at www.ti.com/sc/package.

Please be aware that an important notice concerning availability, standard warranty, and use in critical applications of Texas Instruments semiconductor products and disclaimers thereto appears at the end of this data sheet.

PRODUCTION DATA information is current as of publication date. Products conform to specifications per the terms of Texas Instruments standard warranty. Production processing does not necessarily include testing of all parameters.

Copyright © 2003, Texas Instruments Incorporated

On products compliant to MIL-PRF-38535, all parameters are tested unless otherwise noted. On all other products, production processing does not necessarily include testing of all parameters.

FUNCTION TABLE
(each gate)

INPUTS				OUTPUT
A	B	C	D	Y
H	H	H	H	L
L	X	X	X	H
X	L	X	X	H
X	X	L	X	H
X	X	X	L	H

logic diagram (positive logic)

Pin numbers shown are for the D, DB, J, N, NS, PW, and W packages.

absolute maximum ratings over operating free-air temperature range (unless otherwise noted)†

Supply voltage range, V_{CC} . . . . . −0.5 V to 7 V
Input clamp current, I_{IK} ($V_I < 0$ or $V_I > V_{CC}$) (see Note 1) . . . . . ±20 mA
Output clamp current, I_{OK} ($V_O < 0$ or $V_O > V_{CC}$) (see Note 1) . . . . . ±20 mA
Continuous output current, I_O ($V_O = 0$ to V_{CC}) . . . . . ±25 mA
Continuous current through V_{CC} or GND . . . . . ±50 mA
Package thermal impedance, θ_{JA} (see Note 2): D package . . . . . 86°C/W
DB package . . . . . 96°C/W
N package . . . . . 80°C/W
NS package . . . . . 76°C/W
PW package . . . . . 113°C/W
Storage temperature range, T_{stg} . . . . . −65°C to 150°C

† Stresses beyond those listed under “absolute maximum ratings” may cause permanent damage to the device. These are stress ratings only, and functional operation of the device at these or any other conditions beyond those indicated under “recommended operating conditions” is not implied. Exposure to absolute-maximum-rated conditions for extended periods may affect device reliability.

NOTES: 1. The input and output voltage ratings may be exceeded if the input and output current ratings are observed.
2. The package thermal impedance is calculated in accordance with JESD 51-7.

SN54HC32, SN74HC32
QUADRUPLE 2-INPUT POSITIVE-OR GATES

SCLS200D – DECEMBER 1982 – REVISED AUGUST 2003

- **Wide Operating Voltage Range of 2 V to 6 V**
- **Outputs Can Drive Up To 10 LSTTL Loads**
- **Low Power Consumption, 20-μA Max I_{CC}**
- **Typical t_{pd} = 8 ns**
- **±4-mA Output Drive at 5 V**
- **Low Input Current of 1 μA Max**

SN54HC32 . . . J OR W PACKAGE
SN74HC32 . . . D, DB, N, NS, OR PW PACKAGE
(TOP VIEW)

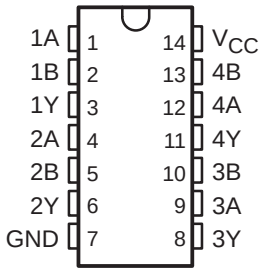

SN54HC32 . . . FK PACKAGE
(TOP VIEW)

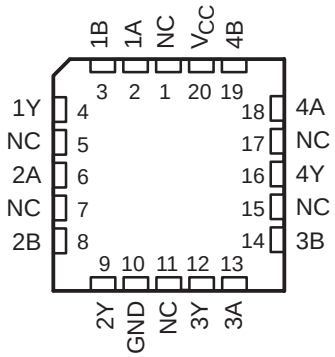

NC – No internal connection

description/ordering information

The ’HC32 devices contain four independent 2-input OR gates. They perform the Boolean function $Y = \overline{\overline{A} \bullet \overline{B}}$ or $Y = A + B$ in positive logic.

ORDERING INFORMATION

T_A	PACKAGE†		ORDERABLE PART NUMBER	TOP-SIDE MARKING
–40°C to 85°C	PDIP – N	Tube of 25	SN74HC32N	SN74HC32N
	SOIC – D	Tube of 50	SN74HC32D	HC32
		Reel of 2500	SN74HC32DR	
		Reel of 250	SN74HC32DT	
	SOP – NS	Reel of 2000	SN74HC32NSR	HC32
	SSOP – DB	Reel of 2000	SN74HC32DBR	HC32
	TSSOP – PW	Tube of 90	SN74HC32PW	HC32
		Reel of 2000	SN74HC32PWR	
		Reel of 250	SN74HC32PWT	
–55°C to 125°C	CDIP – J	Tube of 25	SNJ54HC32J	SNJ54HC32J
	CFP – W	Tube of 150	SNJ54HC32W	SNJ54HC32W
	LCCC – FK	Tube of 55	SNJ54HC32FK	SNJ54HC32FK

† Package drawings, standard packing quantities, thermal data, symbolization, and PCB design guidelines are available at www.ti.com/sc/package.

Please be aware that an important notice concerning availability, standard warranty, and use in critical applications of Texas Instruments semiconductor products and disclaimers thereto appears at the end of this data sheet.

PRODUCTION DATA information is current as of publication date. Products conform to specifications per the terms of Texas Instruments standard warranty. Production processing does not necessarily include testing of all parameters.

Copyright © 2003, Texas Instruments Incorporated

On products compliant to MIL-PRF-38535, all parameters are tested unless otherwise noted. On all other products, production processing does not necessarily include testing of all parameters.

FUNCTION TABLE
(each gate)

INPUTS		OUTPUT
A	B	Y
H	X	H
X	H	H
L	L	L

logic diagram (positive logic)

absolute maximum ratings over operating free-air temperature range (unless otherwise noted)†

Supply voltage range, V_{CC} . . . . . –0.5 V to 7 V
Input clamp current, I_{IK} ($V_I < 0$ or $V_I > V_{CC}$) (see Note 1) . . . . . ±20 mA
Output clamp current, I_{OK} ($V_O < 0$ or $V_O > V_{CC}$) (see Note 1) . . . . . ±20 mA
Continuous output current, I_O ($V_O = 0$ to V_{CC}) . . . . . ±25 mA
Continuous current through V_{CC} or GND . . . . . ±50 mA
Package thermal impedance, θ_{JA} (see Note 2): D package . . . . . 86°C/W
DB package . . . . . 96°C/W
N package . . . . . 80°C/W
NS package . . . . . 76°C/W
PW package . . . . . 113°C/W
Storage temperature range, T_{stg} . . . . . –65°C to 150°C

† Stresses beyond those listed under “absolute maximum ratings” may cause permanent damage to the device. These are stress ratings only, and functional operation of the device at these or any other conditions beyond those indicated under “recommended operating conditions” is not implied. Exposure to absolute-maximum-rated conditions for extended periods may affect device reliability.

NOTES: 1. The input and output voltage ratings may be exceeded if the input and output current ratings are observed.
2. The package thermal impedance is calculated in accordance with JESD 51-7.

recommended operating conditions (see Note 3)

			SN54HC32			SN74HC32			UNIT
			MIN	NOM	MAX	MIN	NOM	MAX	
V_{CC}	Supply voltage		2	5	6	2	5	6	V
V_{IH}	High-level input voltage	V_{CC} = 2 V	1.5			1.5			V
		V_{CC} = 4.5 V	3.15			3.15			
		V_{CC} = 6 V	4.2			4.2			
V_{IL}	Low-level input voltage	V_{CC} = 2 V			0.5			0.5	V
		V_{CC} = 4.5 V			1.35			1.35	
		V_{CC} = 6 V			1.8			1.8	
V_I	Input voltage		0		V_{CC}	0		V_{CC}	V
V_O	Output voltage		0		V_{CC}	0		V_{CC}	V
$\Delta t/\Delta v$	Input transition rise/fall time	V_{CC} = 2 V			1000			1000	ns
		V_{CC} = 4.5 V			500			500	
		V_{CC} = 6 V			400			400	
T_A	Operating free-air temperature		–55		125	–40		85	°C

NOTE 3: All unused inputs of the device must be held at V_{CC} or GND to ensure proper device operation. Refer to the TI application report, *Implications of Slow or Floating CMOS Inputs*, literature number SCBA004.

electrical characteristics over recommended operating free-air temperature range (unless otherwise noted)

PARAMETER	TEST CONDITIONS		V_{CC}	T_A = 25°C			SN54HC32		SN74HC32		UNIT
				MIN	TYP	MAX	MIN	MAX	MIN	MAX	
V_{OH}	$V_I = V_{IH}$ or V_{IL}	I_{OH} = –20 µA	2 V	1.9	1.998		1.9		1.9		V
			4.5 V	4.4	4.499		4.4		4.4		
			6 V	5.9	5.999		5.9		5.9		
		I_{OH} = –4 mA	4.5 V	3.98	4.3		3.7		3.84		
		I_{OH} = –5.2 mA	6 V	5.48	5.8		5.2		5.34		
V_{OL}	$V_I = V_{IH}$ or V_{IL}	I_{OL} = 20 µA	2 V		0.002	0.1		0.1		0.1	V
			4.5 V		0.001	0.1		0.1		0.1	
			6 V		0.001	0.1		0.1		0.1	
		I_{OL} = 4 mA	4.5 V		0.17	0.26		0.4		0.33	
		I_{OL} = 5.2 mA	6 V		0.15	0.26		0.4		0.33	
I_I	$V_I = V_{CC}$ or 0		6 V		±0.1	±100		±1000		±1000	nA
I_{CC}	$V_I = V_{CC}$ or 0, I_O = 0		6 V			2		40		20	µA
C_i			2 V to 6 V		3	10		10		10	pF

switching characteristics over recommended operating free-air temperature range, C_L = 50 pF (unless otherwise noted) (see Figure 1)

PARAMETER	FROM (INPUT)	TO (OUTPUT)	V_{CC}	T_A = 25°C			SN54HC32		SN74HC32		UNIT
				MIN	TYP	MAX	MIN	MAX	MIN	MAX	
t_{pd}	A or B	Y	2 V		50	100		150		125	ns
			4.5 V		10	20		30		25	
			6 V		8	17		25		21	
t_t		Y	2 V		38	75		110		95	ns
			4.5 V		8	15		22		19	
			6 V		6	13		19		16	

operating characteristics, T_A = 25°C

PARAMETER		TEST CONDITIONS	TYP	UNIT
C_{pd}	Power dissipation capacitance per gate	No load	20	pF

ANEXA 17

SN54HC86, SN74HC86
QUADRUPLE 2-INPUT EXCLUSIVE-OR GATES

SCLS100E – DECEMBER 1982 – REVISED AUGUST 2003

- **Wide Operating Voltage Range of 2 V to 6 V**
- **Outputs Can Drive Up To 10 LSTTL Loads**
- **Low Power Consumption, 20-μA Max I_{CC}**
- **Typical t_{pd} = 10 ns**
- **±4-mA Output Drive at 5 V**
- **Low Input Current of 1 μA Max**
- **True Logic**

SN54HC86 . . . J OR W PACKAGE
SN74HC86 . . . D, N, NS, OR PW PACKAGE
(TOP VIEW)

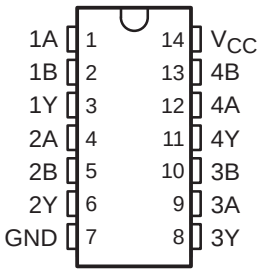

SN54HC86 . . . FK PACKAGE
(TOP VIEW)

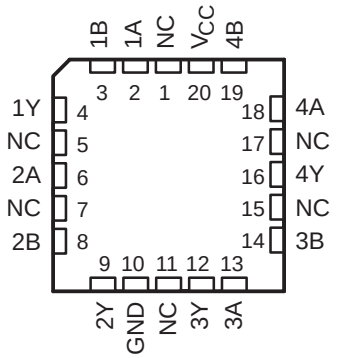

NC – No internal connection

description/ordering information

These devices contain four independent 2-input exclusive-OR gates. They perform the Boolean function $Y = A \oplus B$ or $Y = \overline{A}B + A\overline{B}$ in positive logic.

A common application is as a true/complement element. If one of the inputs is low, the other input is reproduced in true form at the output. If one of the inputs is high, the signal on the other input is reproduced inverted at the output.

ORDERING INFORMATION

T_A	PACKAGE†		ORDERABLE PART NUMBER	TOP-SIDE MARKING
–40°C to 85°C	PDIP – N	Tube of 25	SN74HC86N	SN74HC86N
	SOIC – D	Tube of 50	SN74HC86D	HC86
		Reel of 2500	SN74HC86DR	
		Reel of 250	SN74HC86DT	
	SOP – NS	Reel of 2000	SN74HC86NSR	HC86
	TSSOP – PW	Tube of 90	SN74HC86PW	HC86
		Reel of 2000	SN74HC86PWR	
		Reel of 250	SN74HC86PWT	
–55°C to 125°C	CDIP – J	Tube of 25	SNJ54HC86J	SNJ54HC86J
	CFP – W	Tube of 150	SNJ54HC86W	SNJ54HC86W
	LCCC – FK	Tube of 55	SNJ54HC86FK	SNJ54HC86FK

† Package drawings, standard packing quantities, thermal data, symbolization, and PCB design guidelines are available at www.ti.com/sc/package.

Please be aware that an important notice concerning availability, standard warranty, and use in critical applications of Texas Instruments semiconductor products and disclaimers thereto appears at the end of this data sheet.

PRODUCTION DATA information is current as of publication date. Products conform to specifications per the terms of Texas Instruments standard warranty. Production processing does not necessarily include testing of all parameters.

Copyright © 2003, Texas Instruments Incorporated

On products compliant to MIL-PRF-38535, all parameters are tested unless otherwise noted. On all other products, production processing does not necessarily include testing of all parameters.

FUNCTION TABLE
(each gate)

INPUTS		OUTPUT
A	B	Y
L	L	L
L	H	H
H	L	H
H	H	L

exclusive-OR logic

An exclusive-OR gate has many applications, some of which can be represented better by alternative logic symbols.

Exclusive OR

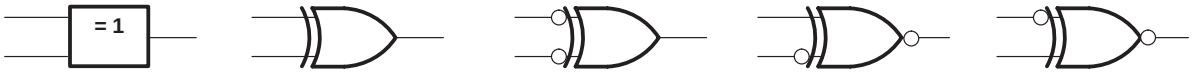

These are five equivalent exclusive-OR symbols valid for an ’HC86 gate in positive logic; negation may be shown at any two ports.

Logic Identity Element

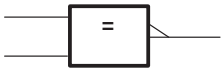

The output is active (low) if all inputs stand at the same logic level (i.e., A = B).

Even-Parity Element

The output is active (low) if an even number of inputs (i.e., 0 or 2) are active.

Odd-Parity Element

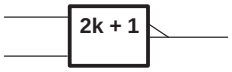

The output is active (high) if an odd number of inputs (i.e., only 1 of the 2) are active.

absolute maximum ratings over operating free-air temperature range (unless otherwise noted)†

Supply voltage range, V_{CC} . . . . . –0.5 V to 7 V
Input clamp current, I_{IK} ($V_I < 0$ or $V_I > V_{CC}$) (see Note 1) . . . . . ±20 mA
Output clamp current, I_{OK} ($V_O < 0$ or $V_O > V_{CC}$) (see Note 1) . . . . . ±20 mA
Continuous output current, I_O ($V_O = 0$ to V_{CC}) . . . . . ±25 mA
Continuous current through V_{CC} or GND . . . . . ±50 mA
Package thermal impedance, θ_{JA} (see Note 2): D package . . . . . 86°C/W
N package . . . . . 80°C/W
NS package . . . . . 76°C/W
PW package . . . . . 113°C/W
Storage temperature range, T_{stg} . . . . . –65°C to 150°C

† Stresses beyond those listed under “absolute maximum ratings” may cause permanent damage to the device. These are stress ratings only, and functional operation of the device at these or any other conditions beyond those indicated under “recommended operating conditions” is not implied. Exposure to absolute-maximum-rated conditions for extended periods may affect device reliability.

NOTES: 1. The input and output voltage ratings may be exceeded if the input and output current ratings are observed.
2. The package thermal impedance is calculated in accordance with JESD 51-7.

BIBLIOGRAFIE

1. Sztojanov, I., s.a., “De la poarta TTL la microprocesor”, Seria "Electronica aplicata", Ed. Tehnica, Buc., 1987;
2. Maican, S., “Sisteme numerice cu circuite integrate - culegere de probleme, Ed. Tehnica, Buc., 1980;
3. Stefan, Gh., “Circuite integrate digitale”, Editura DENIX, Bucuresti, 1993;
4. Toacşe Gh.: "Introducere în microprocesoare", Ed. Ştiinţifică şi Enciclopedică, Buc., 1986;
5. Toacşe Gh., Nicula D.: Electronică Digitală, Editura Teora, 2005;
6. S. D. Anghel, „Bazele electronicii”, Universitatea „Babeş-Bolyai”, Cluj-Napoca 2005;
7. T. J. Floyd, „Dispozitive electronice”, Ed. Teora, Bucureşti 2003;
8. K. F. Ibrahim, „Introducere în electronică”, Ed. Teora, Bucureşti 2001;
9. B. Wilkinson, „Electronică digitală”, Ed. Teora, Bucureşti 2002;
10. D. Dascălu, L. Turic şi I. Hoffman, „Circuite electronice”, Ed. Didactică şi Pedagogică, Bucureşti 1981;
11. J. F. Wakerly, „Circuite digitale”, Ed. Teora, Bucureşti 2002;
12. S. D. Anghel, „Instrumentaţie cu circuite digitale”, Universitatea „Babeş-Bolyai”, Cluj-Napoca 2001;